PRODOTTI / RICAMBI
PRODUCTS / SPARE PARTS
PRODUITS / PIECES DETACHEES
PRODUKTE / ERSATZTEILE
PRODUCTOS / REPUESTOS

Esplosi: mod. “2-3-4 GR”

02-12-2008

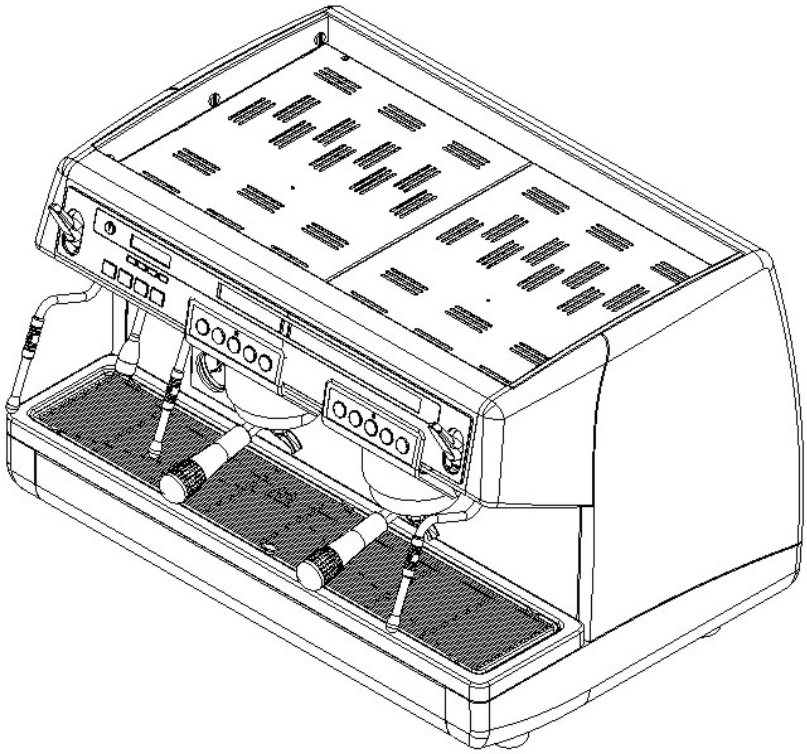

INDICE

» TAV 01 - **COMPONENTI GRUPPO CARENA**
CABINET PARTS

» TAV 02 - **COMPONENTI GRUPPO INVOLUCRO COMANDI**
CONTROL PANEL PARTS

» TAV 03 - **VARIANTI INVOLUCRO COMANDI**
CONTROL PANEL VERSIONS

» TAV 04 - **COMPONENTI GRUPPO EROGAZIONE**
POURING UNIT GROUP PARTS

» TAV 05 - **COMPONENTI IDRAULICI**
HYDRAULIC PARTS

» TAV 06 - **COMPONENTI RUBINETTI VAPORE E ACQUA CALDA**
STEAM & HOT WATER VALVES PARTS

» TAV 07 - **COMP. MISCELATORE ACQUA CALDA E 3° LANCIA**
HOT/COLD WATER MIX AND 3° STEAM PIPE PARTS

» TAV 08 - **COMPONENTI GRUPPO IDRAULICO**
HYDRAULIC GROUP PARTS

» TAV 09 - **COMPONENTI CALDAIA**
BOILER PARTS

» TAV 10 - **COMPONENTI TELAIO**
FRAME PARTS

» TAV 11 - **COMPONENTI ELETTRICI ED ELETTRONICI**
ELECTRONIC & ELECTRIC PARTS

» LEGENDA :

I CODICI SCRITTI IN GRASSETTO SI RIFERISCONO AI COMPONENTI IMPIEGATI ATTUALMENTE.

I CODICI IMPIEGATI PRIMA SONO SCRITTI IN CORSIVO CON INDICATA A FIANCO LA DATA DI FINE VALIDITA'.

ESEMPIO:

07300127 (ϕ2.5) - 16/05/2007
07300226 (ϕ2)

nuova SIMONELLI®

COMPONENTI GRUPPO CARENA
CABINET PARTS

A U R E L I A

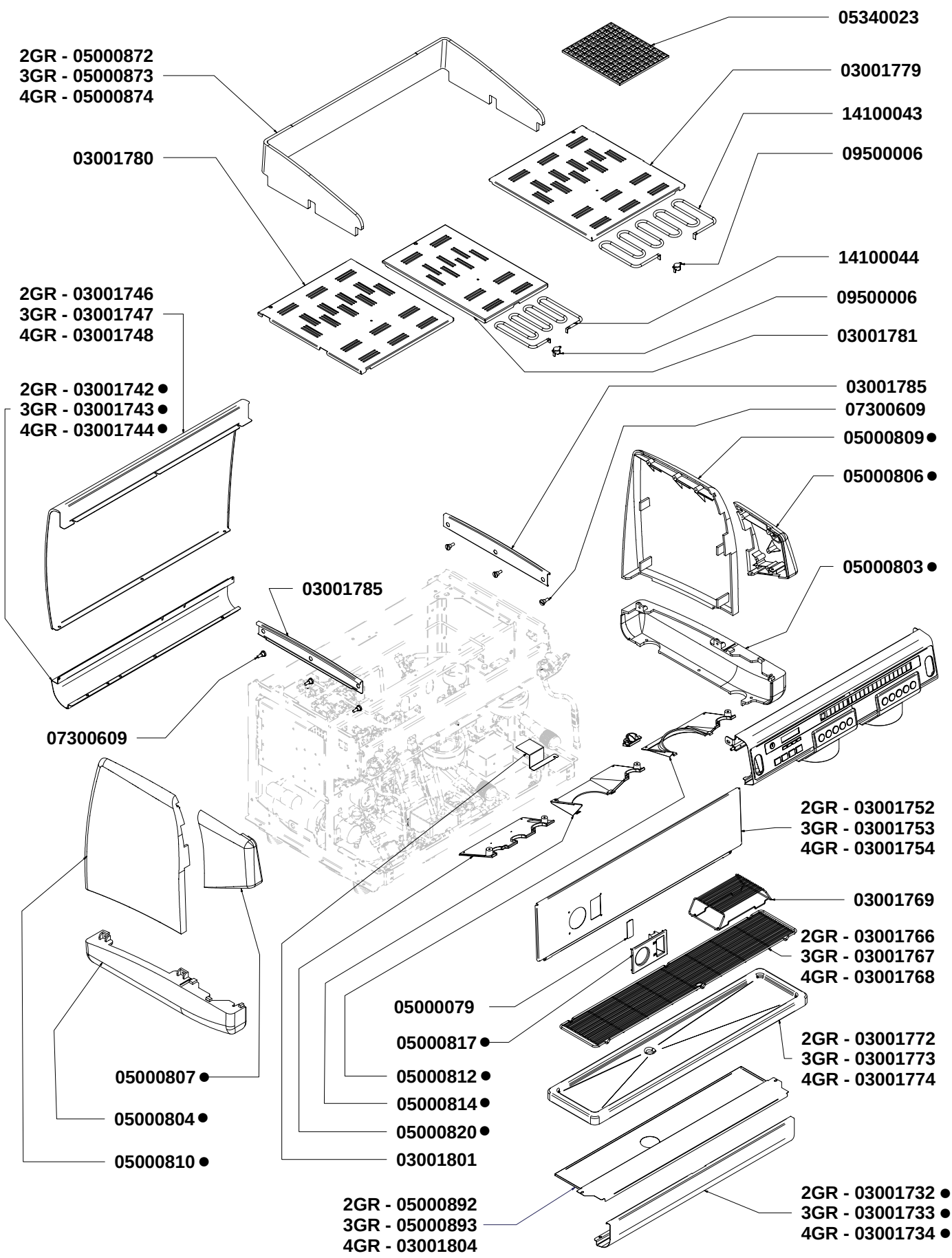

nuova SIMONELLI

● **SPECIFICARE COLORE: VEDI LISTA**
SPECIFY COLOR: SEE LIST

TAV 01

COMPONENTI GRUPPO INVOLUCRO COMANDI
CONTROL PANEL PARTS

A U R E L I A

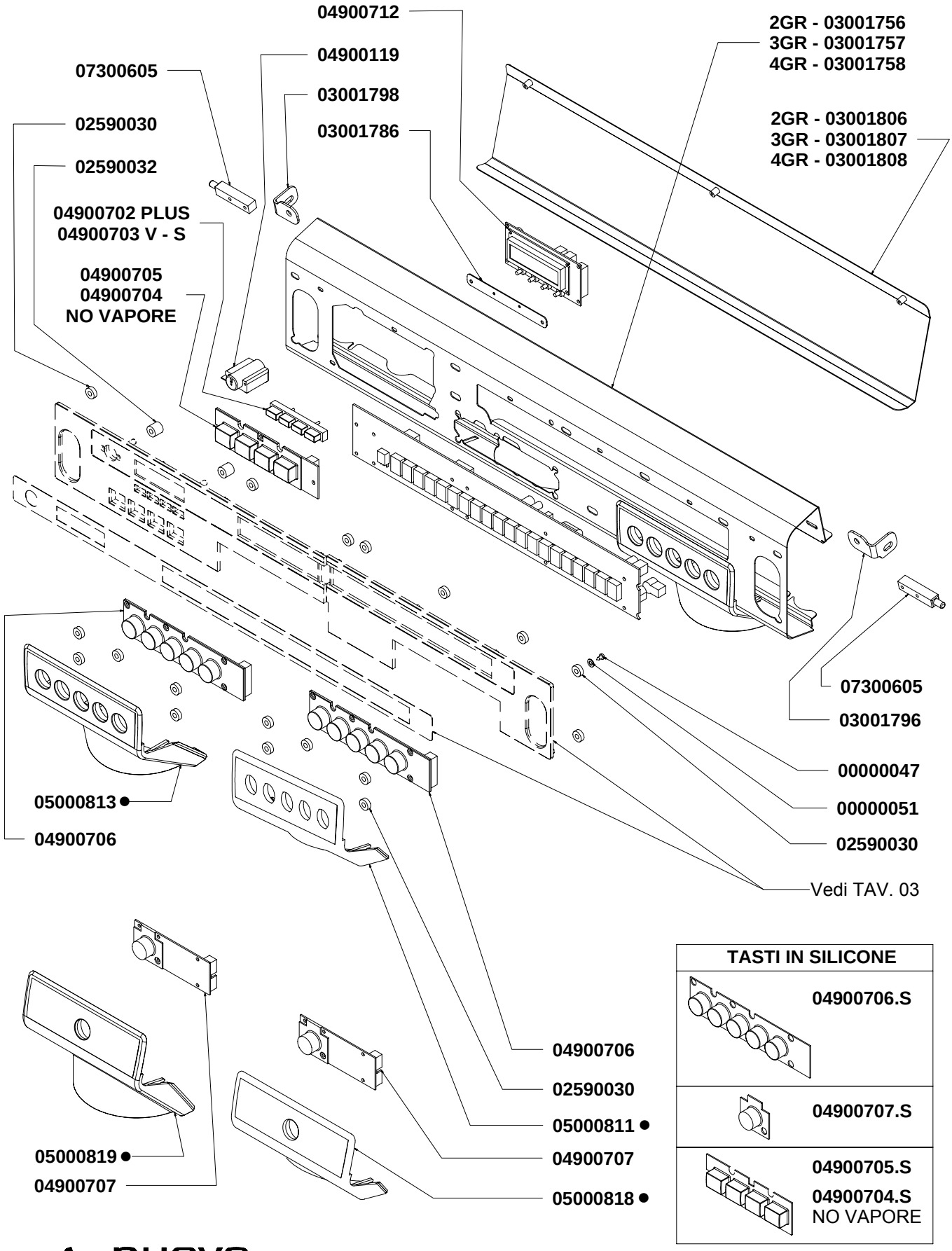

TASTI IN SILICONE	
	04900706.S
	04900707.S
	04900705.S 04900704.S NO VAPORE

nuova SIMONELLI

● **SPECIFICARE COLORE: VEDI LISTA**
SPECIFY COLOR: SEE LIST

TAV 02

VARIANTI INVOLUCRO COMANDI
CONTROL PANEL VERSIONS

AURELIA

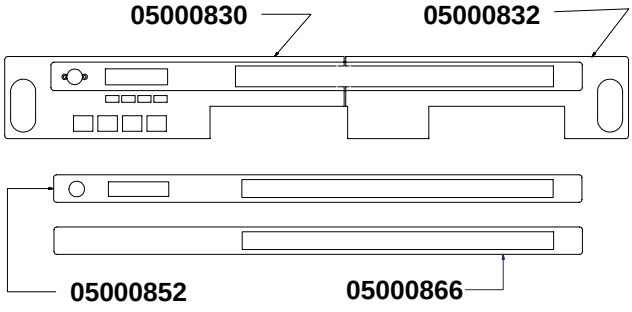

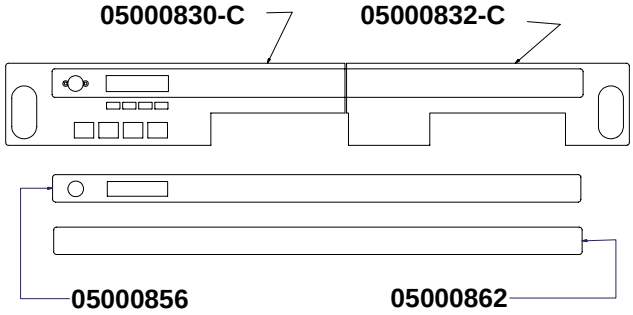

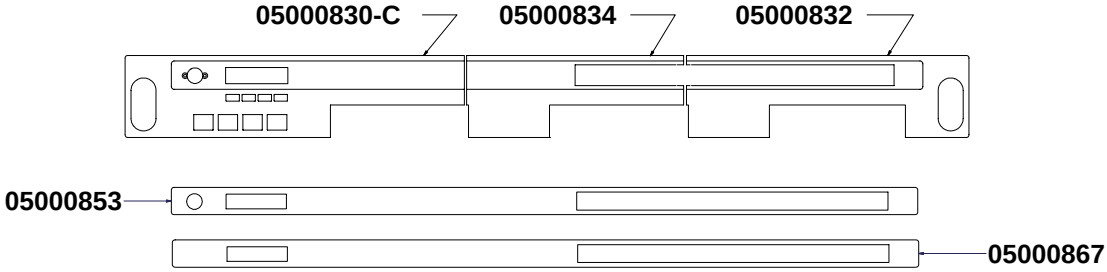

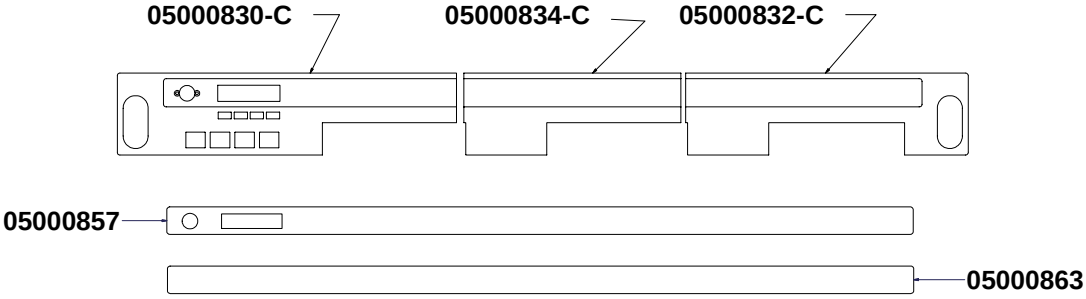

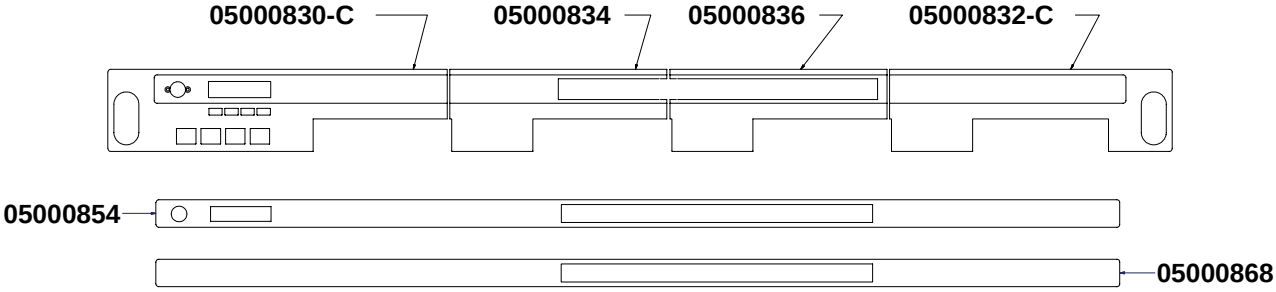

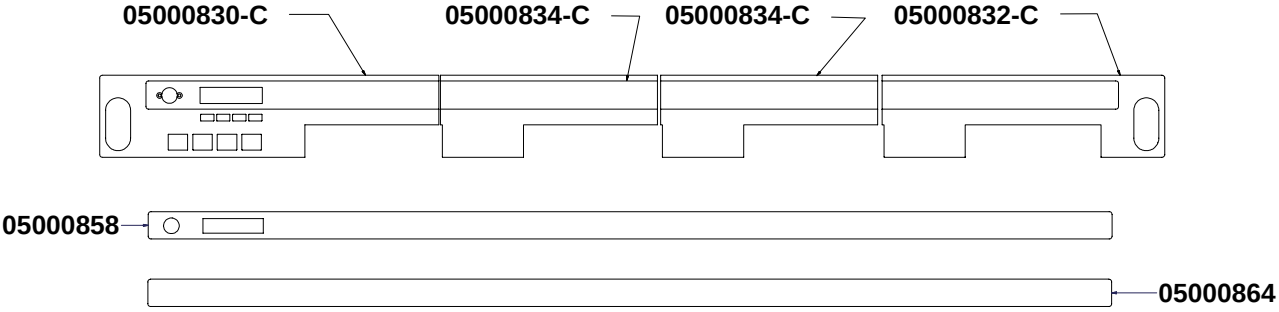

nuova SIMONELLI

TAV 03

COMPONENTI GRUPPO EROGAZIONE
POURING UNIT GROUP PARTS

AURELIA

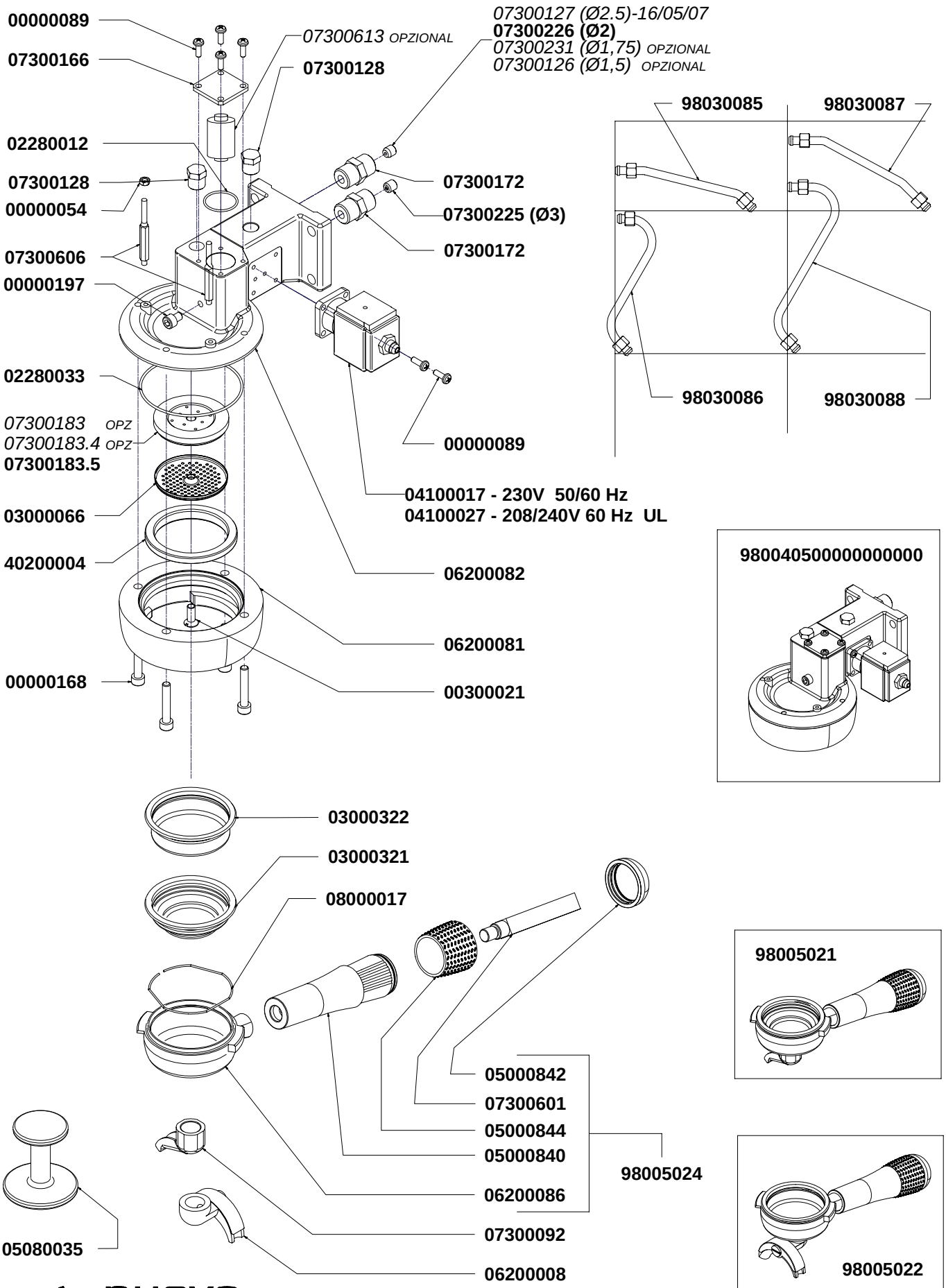

nuova SIMONELLI

TAV 04

COMPONENTI IDRAULICI
HYDRAULIC PARTS

A U R E L I A

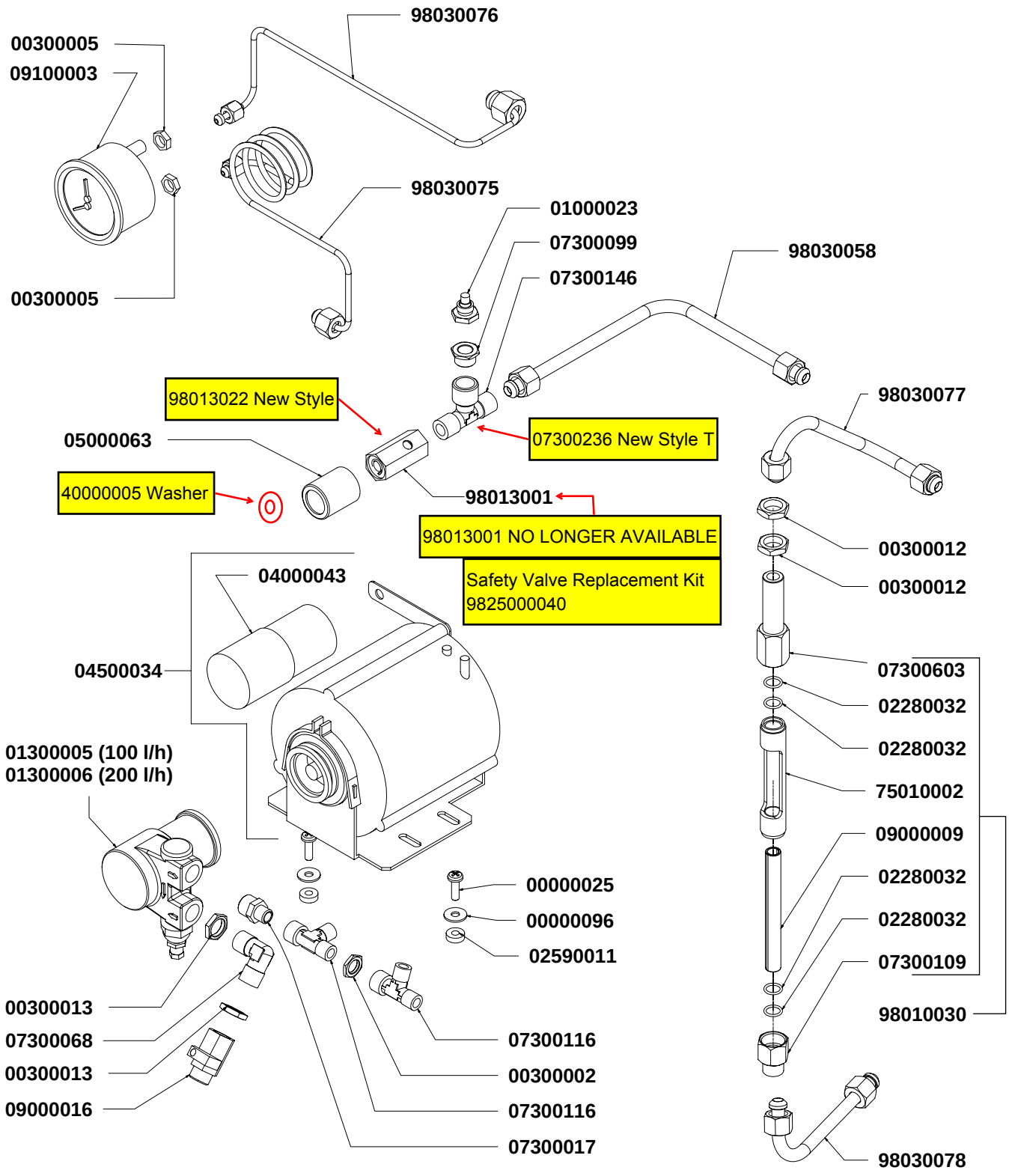

COMPONENTI IDRAULICI		
CODICE	DESCRIZIONE	DESCRIPTION
01000113	TUBO INGRESSO L=1500	FILLING TUBE L=1500
01000030	TUBO INGRESSO L=500	FILLING TUBE L=500
01000087	TUBO SCARICO	DRAINING TUBE
00000133	FASCETTA INOX	STAINLESS STEEL GIRDLE

nuova SIMONELLI

COMPONENTI RUBINETTI VAPORE E ACQUA CALDA
STEAM & HOT WATER VALVES PARTS

AURELIA

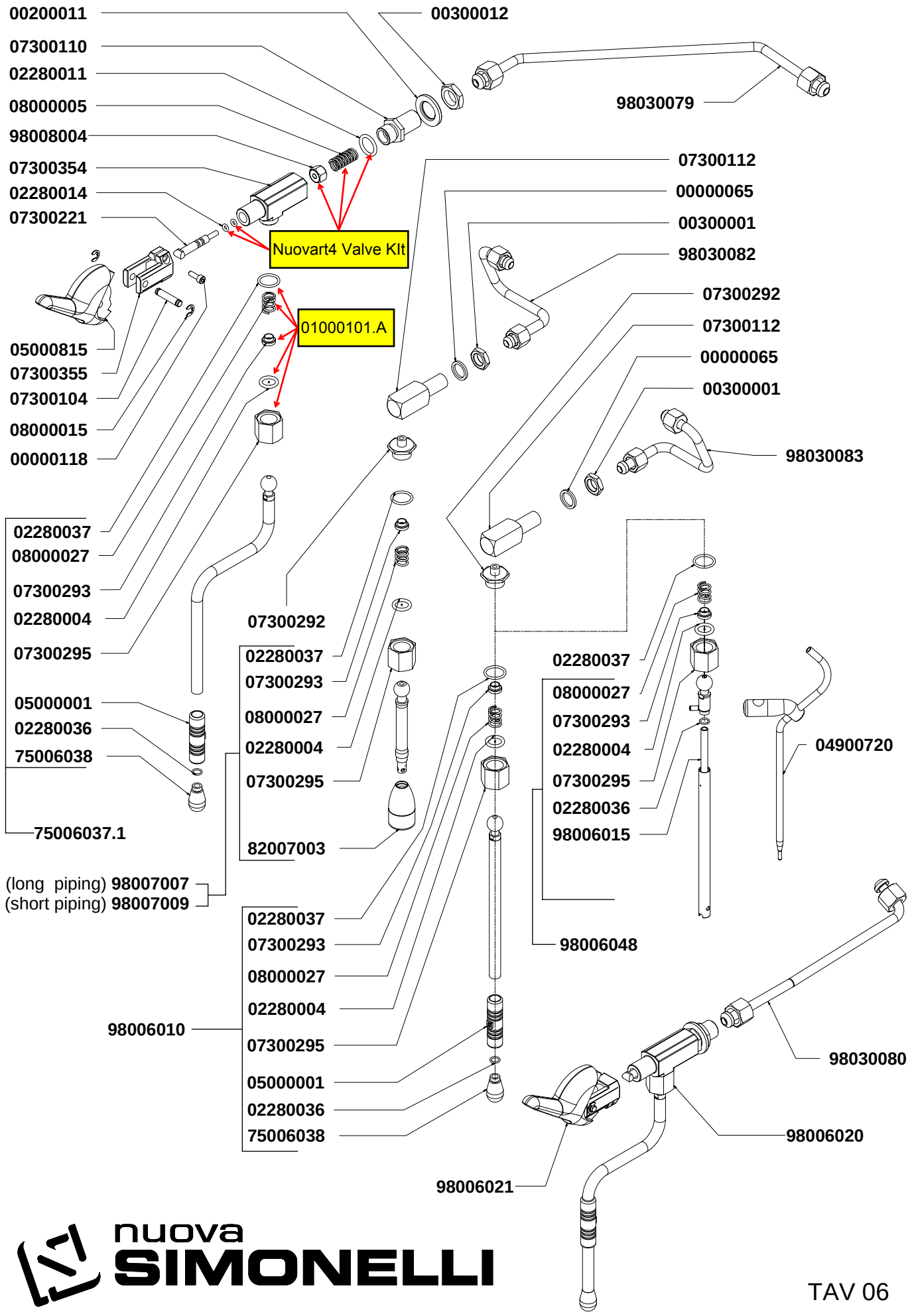

nuova SIMONELLI

TAV 06

COMPONENTI MISCEL. ACQUA CALDA E 3° LANCIA
HOT/COLD WATER MIX & 3° STEAM PIPE PARTS

AURELIA

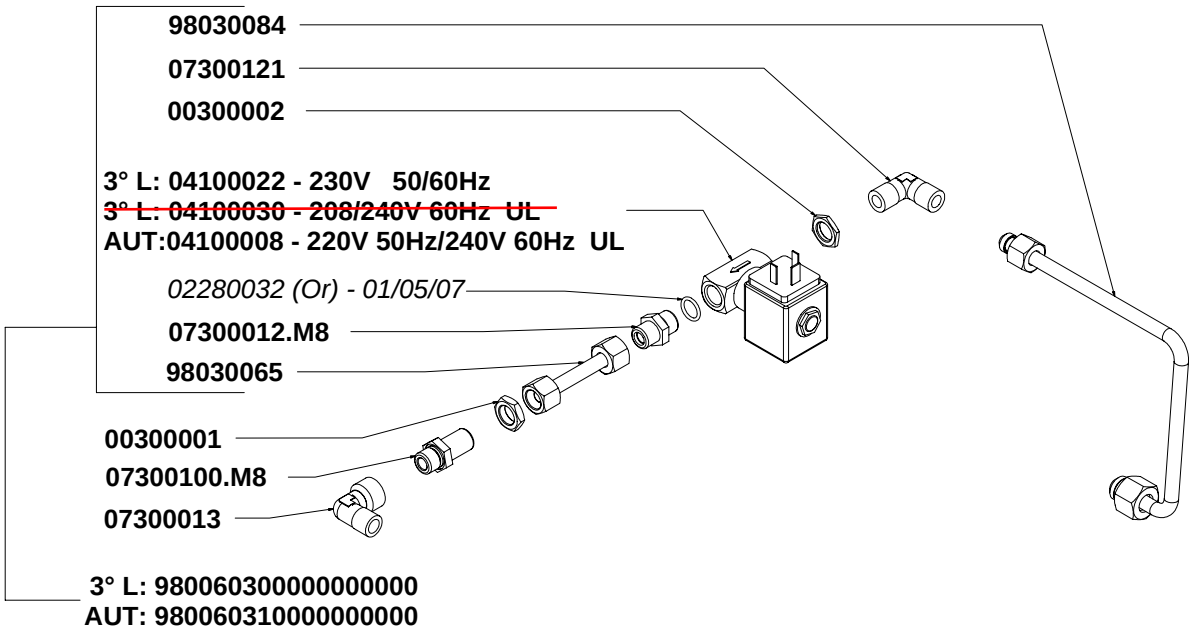

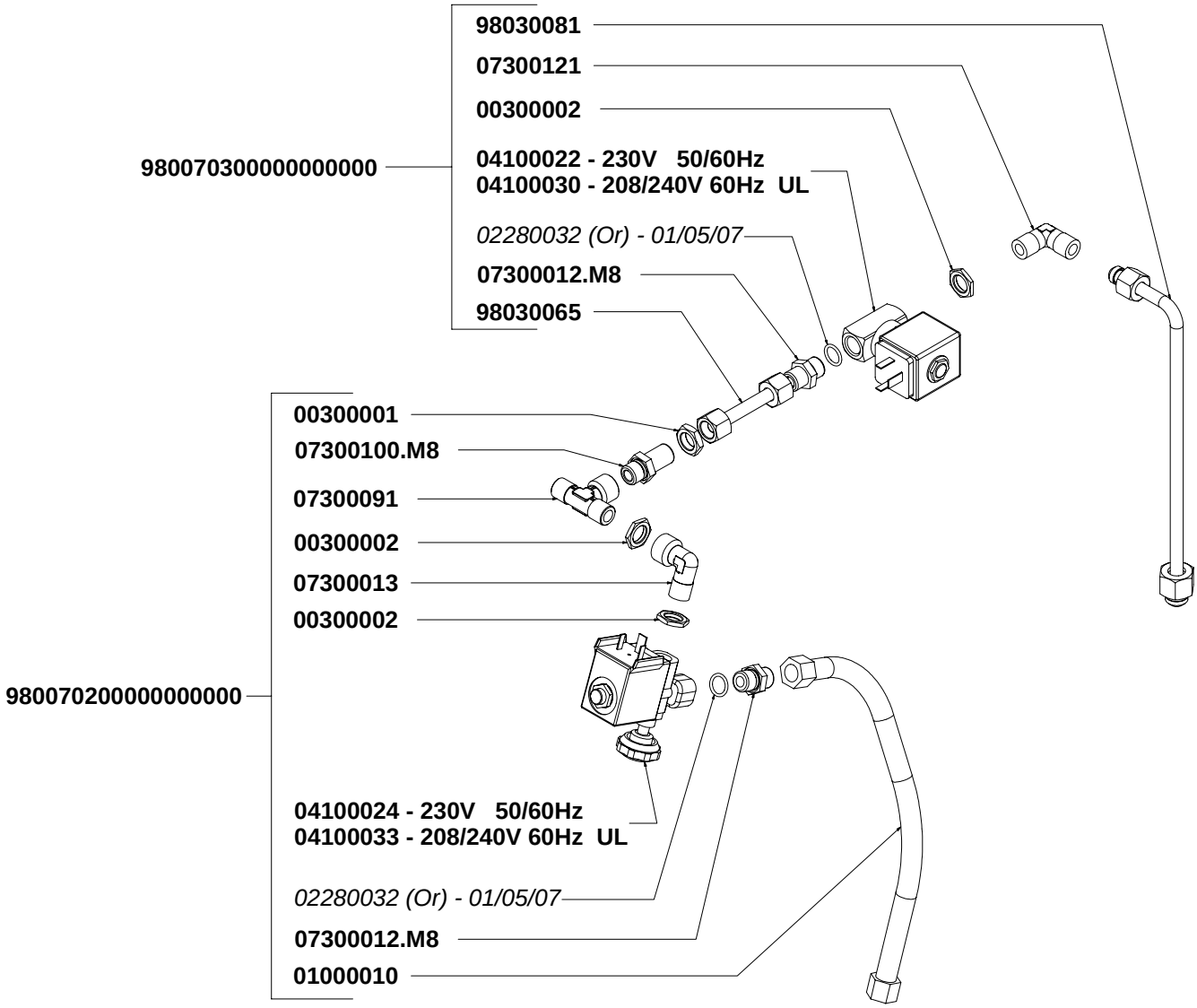

nuova SIMONELLI

TAV 07

COMPONENTI GRUPPO IDRAULICO
HYDRAULIC GROUP PARTS

AURELIA

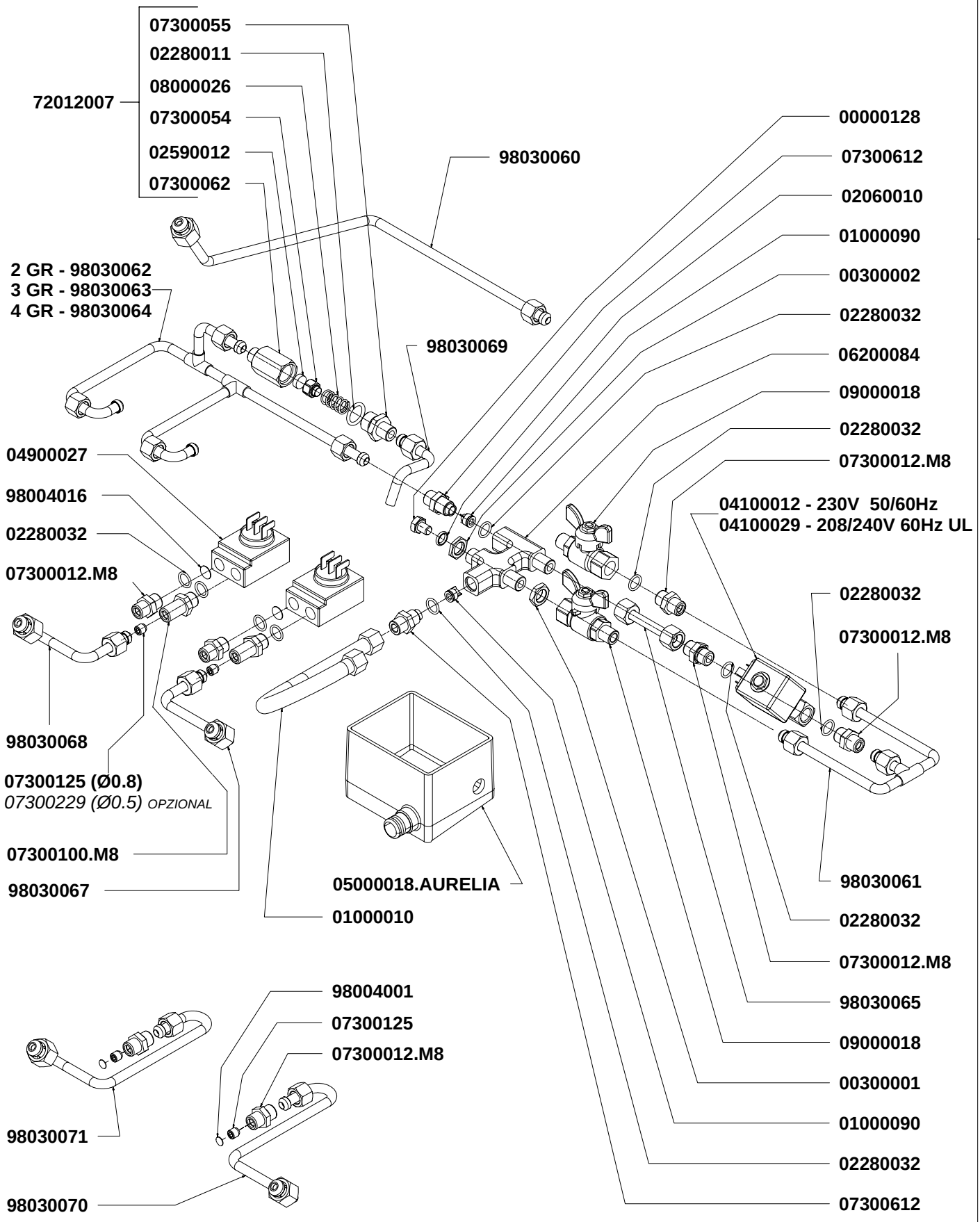

nuova SIMONELLI

TAV 08

COMPONENTI CALDAIA
BOILER PARTS

AURELIA

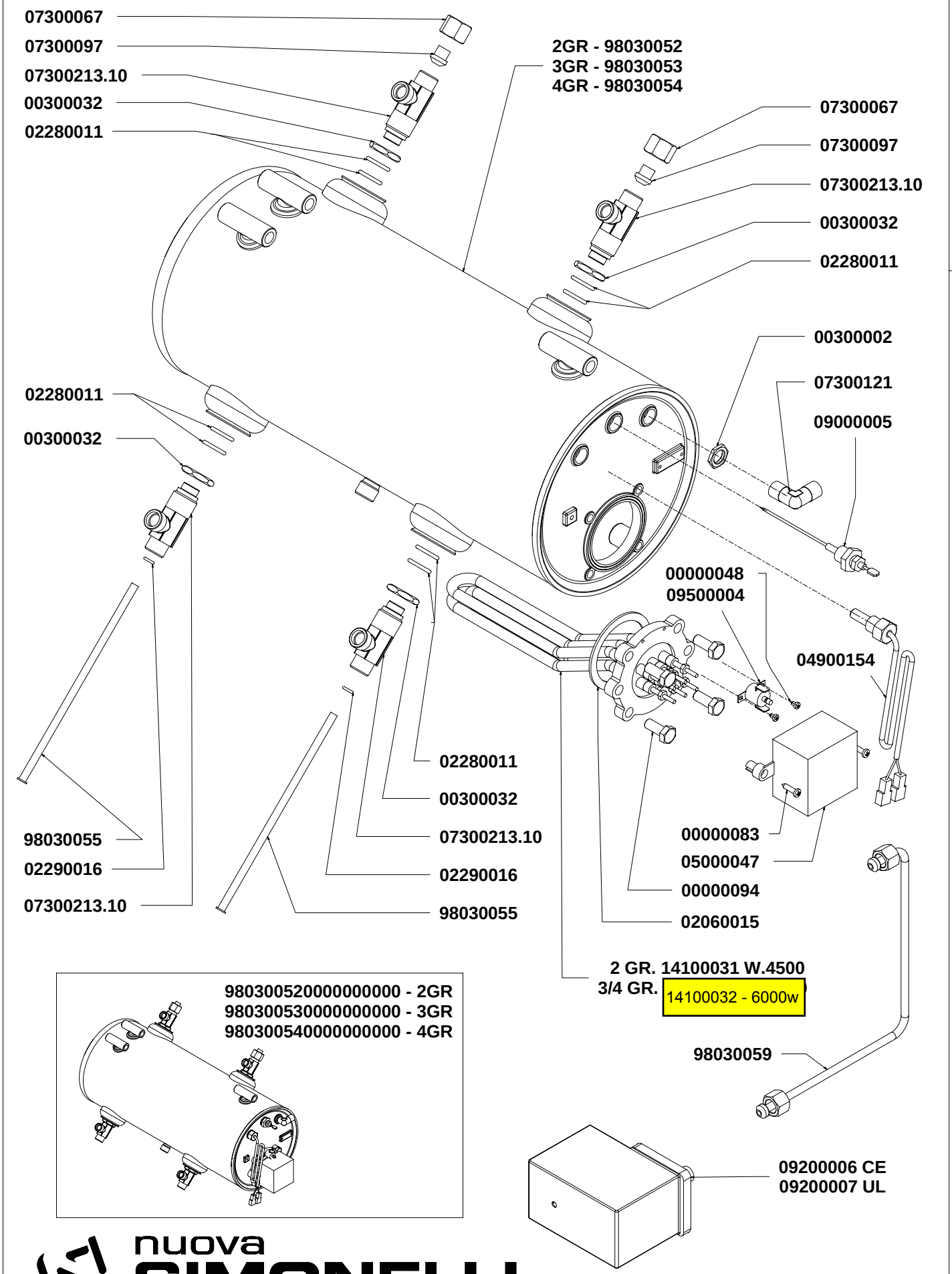

nuova SIMONELLI

TAV 09

COMPONENTI TELAIO
FRAME PARTS

A U R E L I A

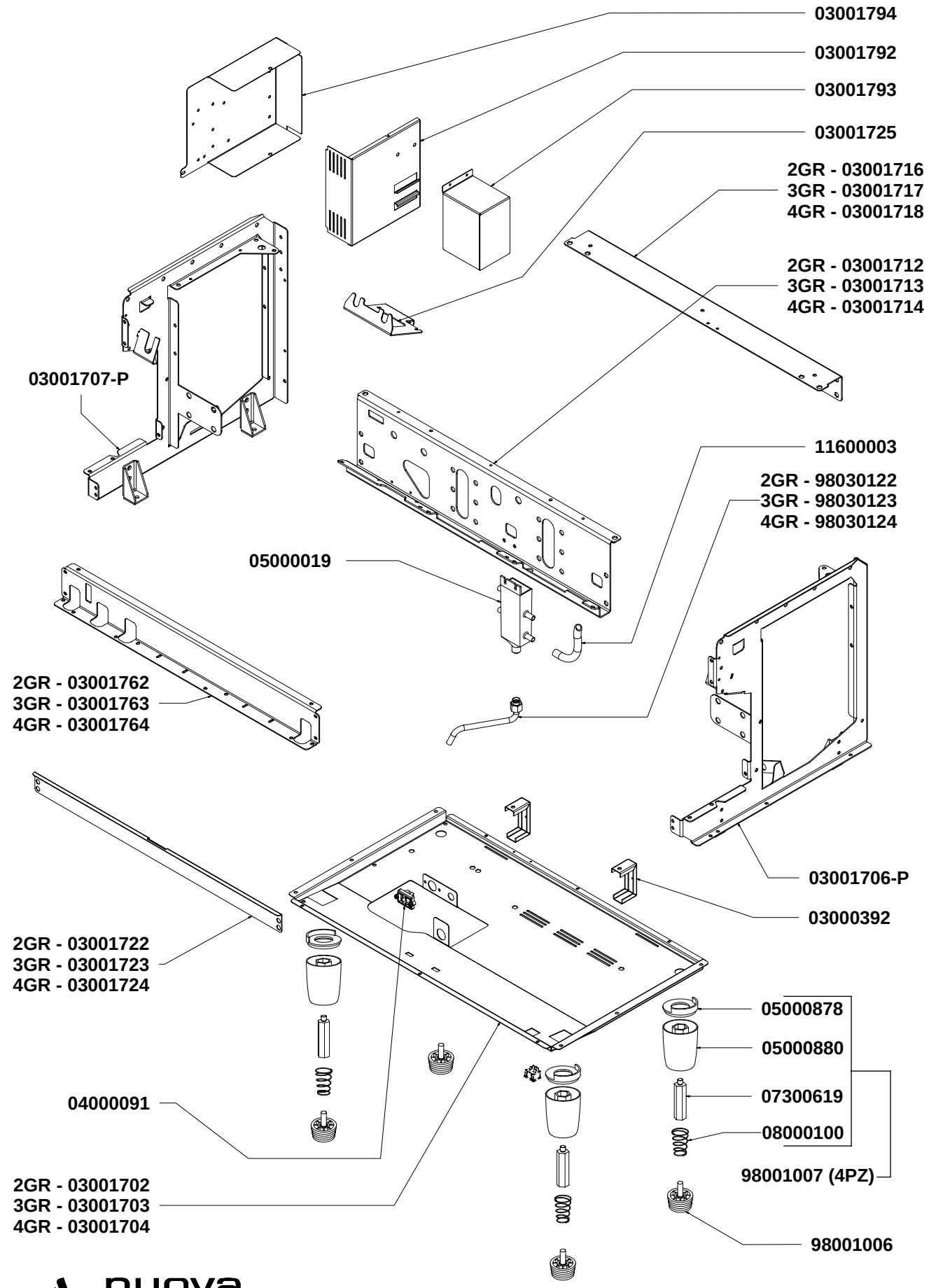

nuova SIMONELLI

TAV 10

COMPONENTI ELETTRICI ED ELETTRONICI
ELECTRONIC & ELECTRIC PARTS

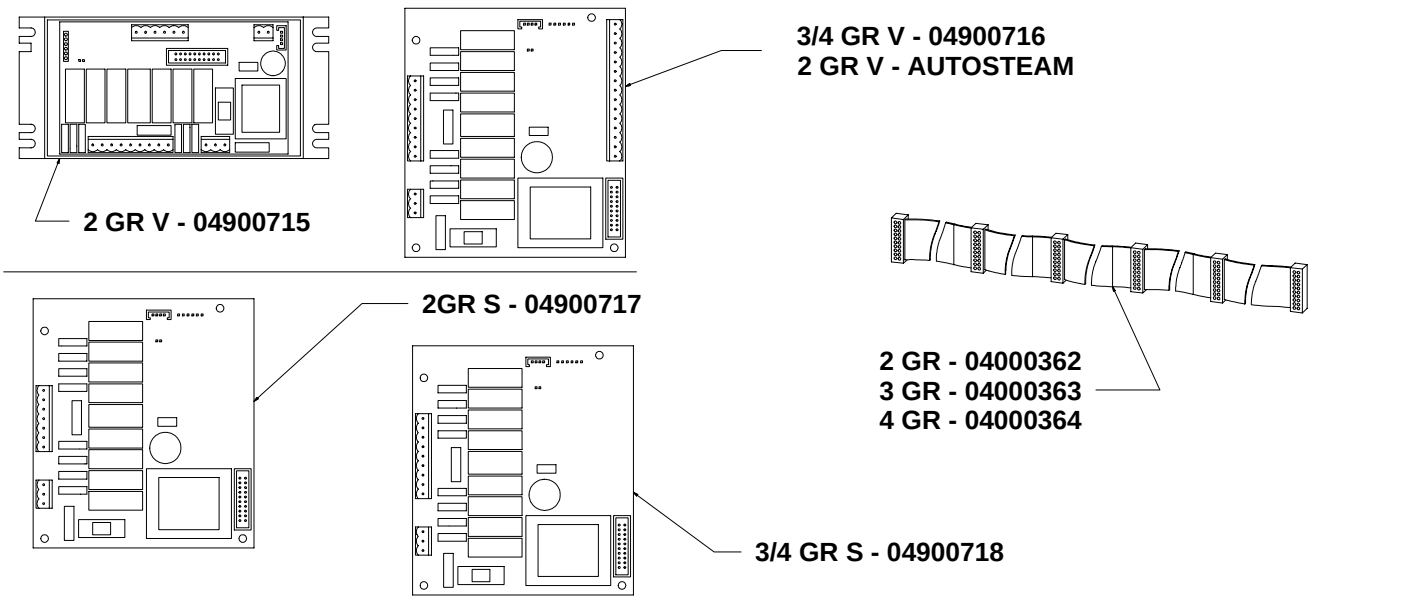

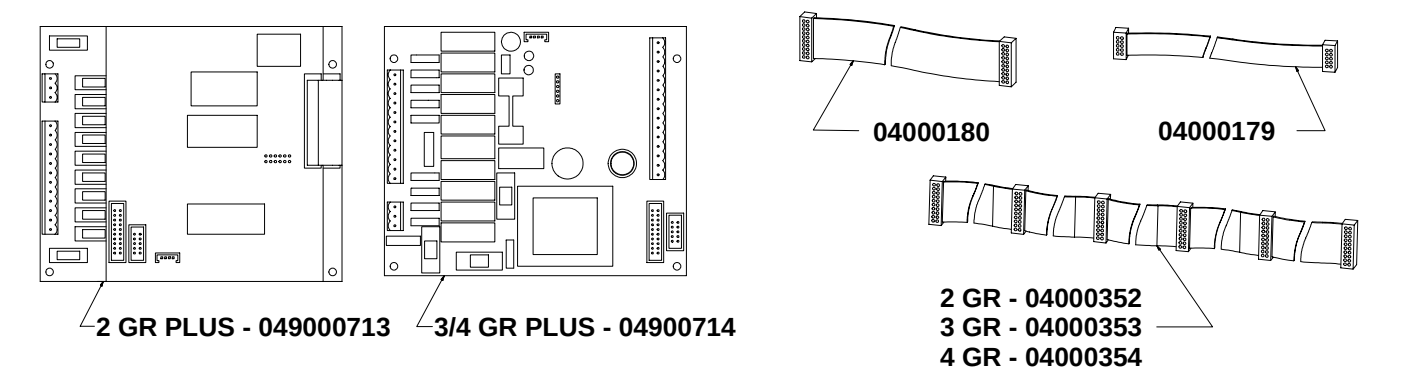

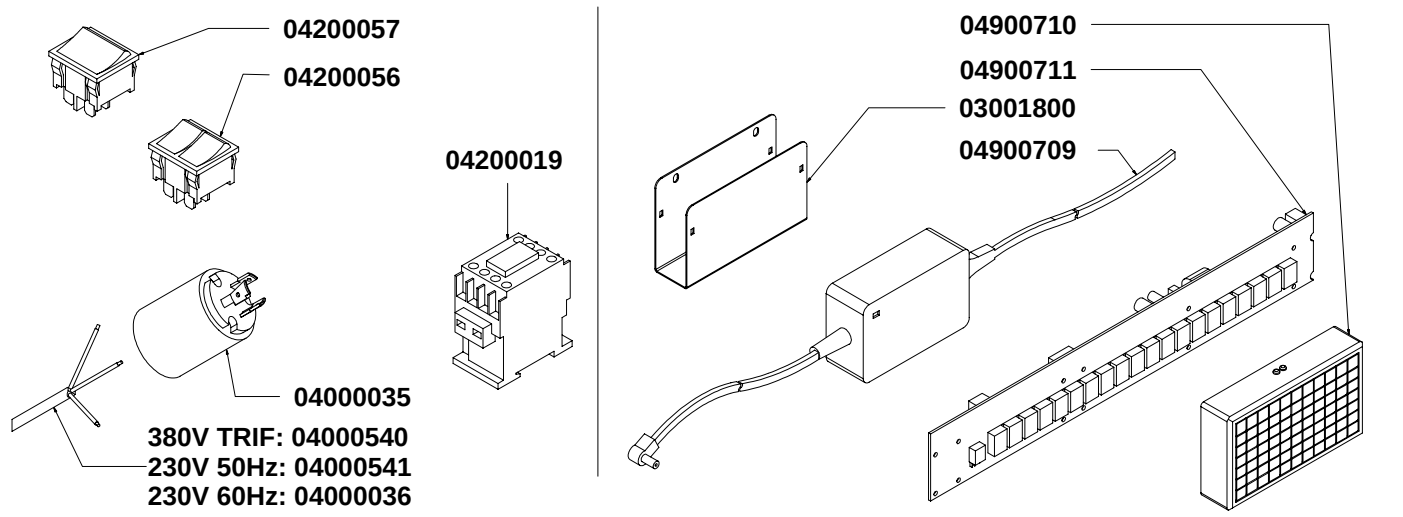

COMPONENTI ELETTRICI		
COD.	DESCRIZIONE	ENGLISH DESCR.
04000342	IMPIANTO ELETTRICO 2 GR	2 GR WIRING
04000344	IMPIANTO ELETTRICO 3/4 GR	3/4 GR WIRING
04000368	IMP. ELET. SUPPLEMENTO 4 GR	4 GR ADDITIONAL WIRING
04000370	IMP. ELET. SUPPL. DOSATORE 4 GR	4 FLOWMETER ADD. WIRING
04000346	CABL. ELETTR. SCALDATAZZE 2 GR	2 GR CUP WARMER WIRING
04000347	CABL. ELETTR. SCALDATAZZE 3 GR	3 GR CUP WARMER WIRING
04000348	CABL. ELETTR. SCALDATAZZE 4 GR	4 GR CUP WARMER WIRING

nuova SIMONELLI

CODICE	DESCRIZIONE	DESCRIPTION	DATA FINE VALIDITA'
00000025	VITE AQ M 6X20 TC T.CR. ZINC	GALV. CROSS HEAD CAP SCREW AQ M6x20	
00000047	VITE AUTOF. 2,9X6,5 TC/T.CR.	CROSS HEAD CAP SELF-TAPPING SCREW 2,9x6,5	
00000048	VITE AUTOF. 2,9X4,5 TC/T.CR.	SELF-THREADING SCREW 2.9x4.5 TC/T.CR.	
00000051	RONDELLA Di4xDe8 UNI 6592	WASHER 4x8	
00000054	DADO AQ M4 ALTO ZINCATO	NUT M4 HIGH GALVANISED NUT	
00000065	RONDELLA OT 1/4 AGG.07.03.86	BRASS WASHER 1/4	
00000083	VITE AUTOF. 3,9x16 TC/T.CR.	CROSS HEAD CAP SELF-TAPPING SCREW 3,9x16	
00000089	VITE INOX M4X12 TC TCR DIN7985	SS CROSS HEAD CAP SCREW M4x12	
00000094	VITE INOX M 8X20 TE 5739	STAINLESS STEEL HEX CAP SCREW M8x20	
00000096	RONDELLA ZINC M6 6,6X18X1.5	GALVANISED WASHER M6 6,6x18x1,5	
00000118	VITE INOX M4X12 BRUGOLA 5931	SS HEX SOCKET CAP SCREW M4x12	
00000128	VITE INOX M8x10 TE TUTTO FIL.	STAINLESS STEEL HEX CAP SCREW M8x10	
00000133	FASCETTA INOX WD12 16-25 C7 W2	STAINLESS STEEL GIRDLE WD12 16-25 C7 W2	
00000168	VITE INOX M6x35 TCEI 5931	STAINLESS STEEL HEX SOCKET CAP SCREW M6x35	
00000197	VITE INOX M6x8 TCEI ISO 4762	STAINLESS HEX SOCKET CAP SCREW M6x8	
00200011	RONDELLA ZINC M16 17X30X3	GALVANISED WASHER M16 17x30x3	
00300001	DADO OT 1/4 GAS SPESSORE 5	BRASS NUT 1/4 GAS SPESSOR 5	
00300002	DADO OT 1/4 SPESS.3	BRASS NUT 1/4 SPESSOR 3	
00300005	DADO OT 1/8 GAS SPESSORE 4	BRASS NUT 1/8 GAS SPESSOR 4	
00300012	DADO OT 3/8 GAS ES 22 SPES 6	BRASS NUT 3/8 GAS SPESSOR 6 HEX 22	
00300013	DADO OT 3/8 GAS SPESS.4 mm	BRASS NUT 3/8 GAS SPESSOR 4	
00300021	VITE INOX M6X18 TSP TC DIN963	SS SLOTTED COUNTERSUNK SCREW M6X18 DIN963	
00300032	DADO 1/2" GAS ES.25 SPESS.5	NUT 1/2 GAS SPESSOR 5 HEX 25	
01000010	TUBO FLESS.INOX 1/4-F.F. L.300	STAINLESS STEEL FLEXIBLE TUBE 1/4 F-F L.300	
01000023	VALVOLINA SFIATO	ANTI VACUUM VALVE	
01000030	TUBO FLESS INOX 3/8 FF 500 AL	STAINLESS STEEL FLEXIBLE TUBE 3/8 F-F L.500	
01000087	TUBO SCARICO 18x24,4	DRAINING TUBE 18x24,4	
01000090	VALVOLINA DI RITEGNO CO10	RETAINING VALVE CO10	
01000113	TUBO FLESS INOX 3/8 A 90ø F. -3/8 F. L=1500	SS FLEXIBLE TUBE 3/8 90° BENDED 3/8 F-F L1500	
01300005	POMPANTE VOLUMETRICO 100 lt/h	VOLUMETRIC PUMP 100 Lt/h	
01300006	POMPANTE VOLUMETRICO 200 lt/h	VOLUMETRIC PUMP 200 Lt/h	
02060010	OR RAME 8,3x13xh1,9 DN8	COPPER GASKET O RING 8.3x13x1.9 ND8	
02060015	GUARNIZIONE PTFE 067x054x2	GASKET FOR HEATING ELEMENT 067x054x2	
02280004	GUARN. OR 115 D.17 EP856	GASKET OR 115 D17 EP851 x SWIVEL STEAM PIPE	
02280011	GUARN. OR R11 D19 EP 851	GASKET O RING R11 D19 EP 851	
02280012	GUARN. OR 2093 D.27 EP851	GASKET O RING 2093 D.27 EP851	
02280014	GUARN. OR D 7 AN2/OR102 SILIC	GASKET O RING D.7 AN2/OR102 SILICON	
02280032	GUARN. OR 114 D.15 EP 851	GASKET O RING 114 D.15 EP 851	
02280033	GUARN. OR 75,92x1,78 NBR XP70	GASKET O RING 75.92x1.78 NBR XP70	
02280036	GUARN. OR x BECCO LANCIA VAP.	GASKET OR x STEAM WAND NOZZLE	
02280037	GUARN. OR CHIUSURA SNODO 16x2	GASKET OR JOINT LOCK 16x2	
02290016	GUARN. OR D 9,5 R5 SILICONE R.	GASKET OR D 9,5 R5 SILICON RED	
02590011	GUARNIZ.PISTONCINO 14,4X6X4,5 SILICONE ROSSO SR 80	PISTON GASKET 14,4X6X4,5	
02590012	GUARNIZ.PISTONCINO D 12X4 SILICONE ROSSO	EXPAN. VALVE PISTON GASKET D.12x4 RED SILICON	
02590030	RONDELLA 4.8x11.2xH 3.9 SANT/64 AL	WASHER 4.8x11.2xH 3.9 SANT/64 AL	
02590032	RONDELLA 4.8x11.2xH 10.5 SANT/64 AL	WASHER 4.8x11.2xH 10.5 SANT/64 AL	
03000066	DOCCIA INOX 056X05,5X6	SHOWER INOX 056X05,5X6	
03000107	FILTRO CIECO	BLIND FILTER	
03000321	FILTRO 1 CAFFE' h=21,5 MOD.90	FILTER 1 COFFEEH=21,5 MOD.90	
03000322	FILTRO 2 CAFFE' h=21,5 MOD.90	FILTER 2 COFFEEH=21,5 MOD.90	
03000392	SUPPORTO CALDAIA MAC96	BOILER SUPPORT	
03001702	BASAMENTO PORTANTE 2GR AURELIA	BASE PLATE AURELIA 2 GR	
03001703	BASAMENTO PORTANTE 3GR AURELIA 3 GR. APPIA	BASE PLATE AURELIA 3 GR	
03001704	BASAMENTO PORTANTE 4GR AURELIA	BASE PLATE AURELIA 4 GR	
03001706-P	FIANCO DX TELAIO CON RINF. PIEDE SALDATO AURELIA	RIGHT SIDE FRAME WITH WELDED FOOT REINFORC.	
03001707-P	FIANCO SX TELAIO CON RINF. PIEDE SALDATO AURELIA	LEFT SIDE FRAME WITH WELDED FOOT REINFORC.	
03001712	PARETE PORTAGRUPPI 2GR AURELIA	GROUPS SUPPORT FRAME 2 GR.	
03001713	PARETE PORTAGRUPPI 3GR AURELIA	GROUPS SUPPORT FRAME 3 GR.	
03001714	PARETE PORTAGRUPPI 4GR AURELIA	GROUPS SUPPORT FRAME 4 GR.	
03001716	LAMIERA L SUP. POSTERIORE 2GR	L UPPER BACK SUPPORT 2 GR.	
03001717	LAMIERA L SUP. POSTERIORE 3GR	L UPPER BACK SUPPORT 3 GR.	
03001718	LAMIERA L SUP. POSTERIORE 4GR	L UPPER BACK SUPPORT 4 GR.	
03001722	LAMIERA L INF.ANTERIORE 2 GR.	L LOWER FRONT SUPPORT 2 GR.	
03001723	LAMIERA L INF.ANTERIORE 3 GR.	L LOWER FRONT SUPPORT 3 GR.	
03001724	LAMIERA L INF.ANTERIORE 4 GR.	L LOWER FRONT SUPPORT 4 GR.	
03001725	LAMIERA PORTA RUBINET. AURELIA	VALVES SUPPORT FRAME AURELIA	
03001732.G	*LAMIERA INF. FRONTALE 2 GR. GRIGIO ANTRACITE*	*CHARCOAL GRAY LOWER FRONT PANEL AURELIA 2 GR.*	*01/03/2008*
03001732.GM	LAMIERA INF. FRONTALE 2 GR. GRIGIO MEDIO	MEDIUM GRAY LOWER FRONT PANEL AURELIA 2 GR.	
03001733.G	*LAMIERA INF. FRONTALE 3 GR. GRIGIO ANTRACITE*	*CHARCOAL GRAY LOWER FRONT PANEL AURELIA 3 GR.*	*01/03/2008*
03001733.GM	LAMIERA INF. FRONTALE 3 GR. GRIGIO MEDIO	MEDIUM GRAY LOWER FRONT PANEL AURELIA 3 GR.	
03001734.G	*LAMIERA INF. FRONTALE 4 GR. GRIGIO ANTRACITE*	*CHARCOAL GRAY LOWER FRONT PANEL AURELIA 4 GR.*	*01/03/2008*
03001734.GM	LAMIERA INF. FRONTALE 4 GR. GRIGIO MEDIO	MEDIUM GRAY LOWER FRONT PANEL AURELIA 4 GR.	
03001742.G	*LAMIERA INF. POSTERIORE 2 GR. GRIGIO ANTRACITE*	*CHARCOAL GRAY LOWER BACK PANEL AURELIA 2 GR.*	*01/03/2008*
03001742.GM	LAMIERA INF. POSTERIORE 2 GR. GRIGIO MEDIO	MEDIUM GRAY LOWER BACK PANEL AURELIA 2 GR.	
03001743.G	*LAMIERA INF. POSTERIORE 3 GR. GRIGIO ANTRACITE*	*CHARCOAL GRAY LOWER BACK PANEL AURELIA 3 GR.*	*01/03/2008*
03001743.GM	LAMIERA INF. POSTERIORE 3 GR. GRIGIO MEDIO	MEDIUM GRAY LOWER BACK PANEL AURELIA 3 GR.	
03001744.G	*LAMIERA INF. POSTERIORE 4 GR. GRIGIO ANTRACITE*	*CHARCOAL GRAY LOWER BACK PANEL AURELIA 4 GR.*	*01/03/2008*
03001744.GM	LAMIERA INF. POSTERIORE 4 GR. GRIGIO MEDIO	MEDIUM GRAY LOWER BACK PANEL AURELIA 4 GR.	
03001746	LAMIERA RETRO 2 GR. AURELIA	BACK PANEL AURELIA 2 GR.	
03001747	LAMIERA RETRO 3 GR. AURELIA	BACK PANEL AURELIA 3 GR.	
03001748	LAMIERA RETRO 4 GR. AURELIA	BACK PANEL AURELIA 4 GR.	
03001752	LAMIERA FRONTALE 2 GR. AURELIA	FRONT PANEL AURELIA 2 GR.	
03001753	LAMIERA FRONTALE 3 GR. AURELIA	FRONT PANEL AURELIA 3 GR.	
03001754	LAMIERA FRONTALE 4 GR. AURELIA	FRONT PANEL AURELIA 4 GR.	
03001756	INVOLUCRO COMANDI 2GR. AURELIA	CONTROL PANEL HOUSING AURELIA 2 GR.	
03001757	INVOLUCRO COMANDI 3GR. AURELIA	CONTROL PANEL HOUSING AURELIA 3 GR.	
03001758	INVOLUCRO COMANDI 4GR. AURELIA	CONTROL PANEL HOUSING AURELIA 4 GR.	
03001762	CHIUSURA INVOLUCRO COMANDI 2GR AURELIA	CONTROL PANEL HOUSING COVER AURELIA 2 GR.	
03001763	CHIUSURA INVOLUCRO COMANDI 3GR AURELIA	CONTROL PANEL HOUSING COVER AURELIA 3 GR.	
03001764	CHIUSURA INVOLUCRO COMANDI 4GR AURELIA	CONTROL PANEL HOUSING COVER AURELIA 4 GR.	
03001766	RETINA PIANO LAVORO 2 GR.	WORK GRILL 2 GR.	
03001767	RETINA PIANO LAVORO 3 GR.	WORK GRILL 3 GR.	
03001768	RETINA PIANO LAVORO 4 GR.	WORK GRILL 4 GR.	
03001769	SUPP. TAZZINE x AURELIA USA	AURELIA RAISED CUP STAND	
03001772	PIATTO RACCOGLIACQUA 2 GR.	DRAIN TRAY 2 GR.	
03001773	PIATTO RACCOGLIACQUA 3 GR.	DRAIN TRAY 3 GR.	
03001774	PIATTO RACCOGLIACQUA 4 GR.	DRAIN TRAY 4 GR.	
03001779	RETINA PORTATAZZE SUPERIORE DX	RIGHT UPPER CUPWARMER GRILL	
03001780	RETINA PORTATAZZE SUPERIORE SX	LEFT UPPER CUPWARMER GRILL	
03001781	RETINA PORTATAZZE SUP. CENTR.	CENTRAL UPPER CUPWARMER GRILL	

A U R E L I A

CODICE	DESCRIZIONE	DESCRIPTION	DATA FINE VALIDITA'
03001785	MOSTRINA DX-SX AURELIA	TRIM PANEL INSIDE LEFT/RIGHT AURELIA	
03001786	PIASTRINA SUPP.4 TASTI DISPLAY	SUPPORT FOR BUTTONS OF DISPLAY	
03001792	CHIUSURA CENTRALINA AURELIA	CONTROL BOARD COVER	
03001793	COPRI TELERUTTORE AURELIA	ELECTRONIC RELAY COVER AURELIA	
03001794	CONTENITORE CENTRALINA AURELIA	CONTROL BOARD CASE AURELIA	
03001796	STAFFA DX MOVIM. INV. COMANDI AURELIA	CONTROL PANEL HOUSING RIGHT SUPPORT	
03001798	STAFFA SX MOVIM. INV. COMANDI AURELIA	CONTROL PANEL HOUSING LEFT SUPPORT	
03001800	STAFFA SUPPORTO ALIMENTATORE DISPLAY AURELIA	DISPLAY POWER UNIT SUPPORT	
03001801	COPRI INTERRUTTORE AURELIA	SWITCH COVER	
03001804	CHIUSURA SICUR. PIANO LAVORO 4	SAFETY COVER 4 GR.	
03001806	LAMIERA PROTEZIONE VAPORE 2GR AURELIA	STEAM PROTECTION PANEL 2 GR.	
03001807	LAMIERA PROTEZIONE VAPORE 3GR AURELIA	STEAM PROTECTION PANEL 3 GR.	
03001808	LAMIERA PROTEZIONE VAPORE 4GR AURELIA	STEAM PROTECTION PANEL 4 GR.	
04000035	SPINA 30A 250V L630P	PLUG 30A 250V L630P	
04000036	CAVO ELETTRICO 3x12AWG SJO ETL	ELECTRICAL CORD 3x12 AWG SJO ETL	
04000043	CONDENS.10 mF x 04500034	CAPACITOR 10mF x 04500034	
04000091	FISSACAVO 4228/B	CABLE CLAMP 4228/B	
04000179	CAVO 10 VIE DISPLAY/CENTR APPIA V 1 GR. + GUAINA	10 WAYS CABLE	
04000180	CAVO 20 VIE DISPLAY/CENTR	CABLE DISPLAY CTR 20 WAYS	
04000342	CABL. ELETT. AURELIA BASE 2GR	BASE WIRING SYSTEM AURELIA 2 GR.	
04000344	CABL. ELETT. AURELIA BASE 3/4GR	BASE WIRING SYSTEM AURELIA 3/4 GR.	
04000346	CABL. ELETT. SCALDATAZZE 2 GR AURELIA	CUPWARMER WIRING SYSTEM AURELIA 2 GR.	
04000347	CABL. ELETT. SCALDATAZZE 3 GR AURELIA	CUPWARMER WIRING SYSTEM AURELIA 3 GR.	
04000348	CABL. ELETT. SCALDATAZZE 4 GR AURELIA	CUPWARMER WIRING SYSTEM AURELIA 4 GR.	
04000352	CAVO 20 VIE PULS. AURELIA PLUS 2 GR.	20 W CABLE CONN. PUSHBUTTON AURELIA PLUS 2GR	
04000353	CAVO 20 VIE PULS. AURELIA PLUS 3 GR.	20 W CABLE CONN. PUSHBUTTON AURELIA PLUS 3GR	
04000354	CAVO 20 VIE PULS. AURELIA PLUS 4 GR.	20 W CABLE CONN. PUSHBUTTON AURELIA PLUS 4GR	
04000362	CAVO 20 VIE PULS/CENTR AURELIA V/S 2 GR.	20WAYS CABLE CONN. PUSHBUTTON AURELIA S/V 2GR	
04000363	CAVO 20 VIE PULS/CENTR AURELIA V/S 3 GR.	20WAYS CABLE CONN. PUSHBUTTON AURELIA S/V 3GR	
04000364	CAVO 20 VIE PULS/CENTR AURELIA V/S 4 GR.	20WAYS CABLE CONN. PUSHBUTTON AURELIA S/V 4GR	
04000368	SUPPLEMENTO 4ø GRUPPO AURELIA	SUPPLEMENTARY WIRING SYSTEM AURELIA 4° GROUP	
04000370	SUPPLEMENTO 4øDOSATORE AURELIA	SUPPLEM. WIRING SYSTEM AURELIA 4° FLOWMETER	
04000540	CAVO ELETTR. FROR 5x2,5 2mt	POWER SUPPLY CABLE FROR 5x2,5 2mt	
04000541	CAVO ELETTR. FROR 3x4 2mt	POWER SUPPLY CABLE FROR 3x4 2mt	
04100008	E.V. NC 3VIE 1/4-1/4 SC.1/8 220V 50Hz-240V 60Hz RUBY F3 UL	EV 3W 1/4-1/4 DRAIN 1/8 D3 UL	
04100012	E.V. NC 2VIE 1/4-1/4 220-230V 50/60HZ VITON F1.5 CE	EV 2W 1/4 1/4 220-230V 50/60HZ VITON F1,5 CE	
04100017	E.V. NC 3VIE BAS. SCAR. 1/8 230V 50/60Hz RUBY F1.5 CE	EV 3W DOWNL.1/8 220-230V 50/60HZ RUBY F1,5 CE	
04100022	E.V. NC 2VIE 1/4-1/4 220-230V 50/60Hz RUBINO F3 CE	2 WAYS SOLENOID 1/4 F.3 220/230V 50/60Hz	
04100024	E.V. NC 2VIE 1/4 REGOLAT. 90° 230V 50/60Hz EPDM F3 CE	2 WAYS EV WITH REGULATOR	
04100027	E.V. NC 3VIE BAS. SCAR. 1/8 208-240V 60Hz RUBY F1.3 UL	EV 3W DRAIN 1/8 208-240V 60Hz RUBY D1,3 UL	
04100029	E.V. NC 2VIE 1/4-1/4 208-240V 60Hz VITON F1.5 UL	E.V. 2VIE AL 220/240 50/60 UL	
04100030	E.V. NC 2VIE 1/4-1/4 208-240V 60Hz RUBY F3 UL	2 WAYS SOLENOID 1/4 F.3 208-240V 60HZ UL	
04100033	E.V. NC 2VIE 1/4 REGOLAT. 90° 220V 60Hz F3 UL	EV 2 WAYS 1/4 REGULATING 90° 220V 60Hz D3 UL	
04200019	CONTATTORE TETRAPOLARE 25A BOBINA 230 V UL	ELECTRONIC RELAY 25A 230V UL	
04200056	INTERRUT. ACCENSIONE DOPPIO	DOUBLE ON/OFF SWITCH	
04200057	INTERRUT. ACCENSIONE BIPOL. 10A UL 22x19 "AURELIA"	ON/OFF SWITCH 10A UL 22x19	
04500034	MOTORE ELETTRICO 230V 50/60Hz165W	ELECTR. MOTOR 230 V 50/60 HZ	
04900027	DOSATORE VOLUMETRICO OTT.	FLOWMETER	
04900119	BLOCCHETTO CHIAVI + CHIAVI T/U	ELEC.KEY ASSEMBLY+KEYS T/U	
04900154	SONDA TEMPERATURA NTC PR/VIP 1/4	TEMPERATURE PROBE	
04900702	PULSANTIERA G/S 4TASTI PROGRAMMAZ. COLORE 432c	TOUCHPAD G/S 4 BUTTONS PROGRAMM. COLOR 432c	
04900703	PULSANTIERA G/S 4 TASTI SENZA SIMBOLI	TOUCHPAD G/S 4 BUTTONS WITHOUT SIGNS	
04900704	SCHEDA SERVIZI 2 LED SENZA TASTO VAPORE G/S	SERVICE CIRCUIT 2 LED WITHOUT STEAM BUTTON	
04900704.S	TASTI G/S SERVIZI 2 LED SENZA	SERVICE BUTTONS 2 LED WITHOUT STEAM BUTTON	
04900705	SCHEDA SERVIZI 3 TASTI+LED G/S	SERVICE CIRCUIT 3 BUTTONS+LED G/S	
04900705.S	TASTI G/S SERVIZI 3 TASTI+LED	SERVICE BUTTONS 3 BUTTONS+LED G/S	
04900706	SCHEDA EROGAZIONE 5 TASTI G/S	POURING CIRCUIT 5 BUTTONS G/S	
04900706.S	TASTI G/S EROGAZIONE 5 TASTI	POURING BUTTONS 5 BUTTONS G/S	
04900707	SCHEDA EROGAZIONE 1 TASTO G/S	POURING CIRCUIT 1 BUTTON G/S	
04900707.S	TASTO G/S EROGAZ. 1 TASTO	POURING BUTTONS BUTTON G/S	
04900709	ALIMENTATORE 230V. DISPLAY LUMINOSO 20 DIGIT	POWER UNIT 230V FOR LUMINOUS DISPLAY 20 DIGIT	
04900710	TELECOMANDO PROGRAMMAZ. SCRITTA SCORREVOLE	LCD SCREEN PROGRAMMING KEYPAD	
04900711	GIORNALE ELETTR. MH-18 1 RIGA 20 CARATTERI VERDI	LCD SCREEN MH-18 1ROW 20 GREEN CHARACTERS	
04900712	SCHEDA DISPLAY BLU AURELIA	BLUE CARD DISPLAY AURELIA	
04900713	CENTR. AURELIA VIP 2GR	ELECTRONIC CONTROL UNIT AURELIA VIP 2 GR	
04900714	CENTR. AURELIA PLUS 3/4 GR	MAIN ELECTRONIC UNIT AURELIA PLUS	
04900715	CENTR. AURELIA V 2GR	CONTROL BOX AURELIA V2 GR.	
04900716	CENTR. AURELIA V 3/4 GR	CONTROL BOARD AURELIA V 3/4 GR	
04900717	CENTR. AURELIA S 2GR	ELECTRONIC CONTROL UNIT AURELIA SEM 2 GR	
04900718	CENTR. AURELIA S 3/4GR	ELECTRONIC CONTROL UNIT AURELIA SEM 3/4 GR	
04900720	SONDA PT1000 x LANCIA VAPORE "TURBO CREAM"	PROBE PT 1000 FOR TURBO CREAM STEAM WAND	
05000001	GOMMINO PROTEZIONE LANCIA D.10	STEAM ARM RUBBER GRIP	
05000018.AURELIA	VASCHETTA SCARICO AURELIA	DRAIN BOX	
05000019	POZZETTO SCARICO GRUPPO+ TAPPO AURELIA	GROUP DRAIN BOX + PLUG AURELIA	
05000047	COPRI RESISTENZA PROGRAM/ISX *	HEATING ELEMENT COVER	
05000063	COPRI VALVOLA SICUREZZA	SAFETY VALVE COVER	
05000079	PROTEZIONE PER VETRO LIVELLO	PROTECTION FOR LEVEL GLASS	
05000803.G	*FIANCO INF. DX AURELIA GRIGIO ANTRACITE*	*CHARCOAL GREY RIGHT LOWER PANEL AURELIA*	*01/03/2008*
05000803.GM	FIANCO INF. DX AURELIA GRIGIO MEDIO	MEDIUM GREY RIGHT LOWER PANEL AURELIA	
05000804.G	*FIANCO INF. SX AURELIA GRIGIO ANTRACITE*	*CHARCOAL GREY LEFT LOWER PANEL AURELIA*	*01/03/2008*
05000804.GM	FIANCO INF. SX AURELIA GRIGIO MEDIO	MEDIUM GREY LEFT LOWER PANEL AURELIA	
05000806.BA	FIANCO SUP. FRONT. DX AURELIA BLU ADRIATICO	ADRIATIC BLUE RIGHT FRONT UPPER PANEL AURELIA	
05000806.G	*FIANCO SUP. FRONT. DX AURELIA GRIGIO ANTRACITE*	*CHARCOAL GREY RIGHT FRONT UPPER PANEL AURELIA*	*01/03/2008*
05000806.GC	FIANCO SUP. FRONT. DX AURELIA GRIGIO CIELO	RIGHT FRONT UPPER PANEL AURELIA GLOSS GREY	
05000806.R	FIANCO SUP. FRONT. DX AURELIA ROSSO CUORE	SUP FRONT RIGHT AURELIA RED	
05000806.V	FIANCO SUP. FRONT. DX AURELIA VERDE	GREEN RIGHT FRONT UPPER PANEL AURELIA	
05000807.BA	FIANCO SUP. FRONT. SX AURELIA BLU ADRIATICO	ADRIATIC BLUE LEFT FRONT UPPER PANEL AURELIA	
05000807.G	*FIANCO SUP. FRONT. SX AURELIA GRIGIO ANTRACITE*	*CHARCOAL GREY LEFT FRONT UPPER PANEL AURELIA*	*01/03/2008*
05000807.GC	FIANCO SUP. FRONT. SX AURELIA GRIGIO CIELO	LEFT FRONT UPPER PANEL AURELIA GLOSS GREY	
05000807.R	FIANCO SUP. FRONT. SX AURELIA ROSSO CUORE	UPPER FRONT PANEL LEFT AURELIA RED	
05000807.V	FIANCO SUP. FRONT. SX AURELIA VERDE	GREEN LEFT FRONT UPPER PANEL AURELIA	
05000809.BA	FIANCO LATERALE DX AURELIA BLU ADRIATICO	ADRIATIC BLUE RIGHT SIDE PANEL AURELIA	
05000809.BR	*FIANCO LATERALE DX AURELIA BRONZO*	*BRONZE RIGHT SIDE PANEL AURELIA*	*01/03/2008*
05000809.G	*FIANCO LAT. DX AURELIA GRIGIO STEEL*	*STEEL GREY RIGHT SIDE PANEL AURELIA*	*01/03/2008*
05000809.GC	FIANCO LATERALE DX AURELIA GRIGIO CIELO	RIGHT SIDE PANEL AURELIA GLOSS GREY	
05000809.R	FIANCO LATERALE DX AURELIA ROSSO CUORE	RIGHT SIDE PANEL AURELIA RED	
05000809.RM	*FIANCO LATERALE DX AURELIA ROSSO MODI*	*RIGHT SIDE PANEL AURELIA RED MODI*	
05000809.V	FIANCO LATERALE DX AURELIA VERDE	GREEN RIGHT SIDE PANEL AURELIA	
05000810.BA	FIANCO LATERALE SX AURELIA BLU ADRIATICO	ADRIATIC BLUE RIGHT SIDE PANEL AURELIA	
05000810.BR	*FIANCO LATERALE SX AURELIA BRONZO*	*BRONZE RIGHT SIDE PANEL AURELIA*	*01/03/2008*

AURELIA

CODICE	DESCRIZIONE	DESCRIPTION	DATA FINE VALIDITA'
05000810.G	FIANCO LAT. SX AURELIA GRIGIO STEEL	LEFT SIDE GREY AURELIA	
05000810.GC	FIANCO LATERALE SX AURELIA GRIGIO CIELO	RIGHT SIDE PANEL AURELIA GLOSS GREY	
05000810.R	FIANCO LATERALE SX AURELIA ROSSO CUORE	RED LEFT SIDE PANEL AURELIA	01/03/2008
05000810.RM	FIANCO LATERALE SX AURELIA ROSSO MODI	MODI RED RIGHT SIDE PANEL AURELIA	
05000810.V	FIANCO LATERALE SX AURELIA VERDE	GREEN LEFT SIDE AURELIA	
05000811.G	COPRIGRUPPO FR. GR. ALTO 5 FORI GRIGIO STEEL	STEEL GRAY FRONT GROUP COVER AURELIA HIGH GR.	
05000811.GA	COPRIGRUPPO FR. GR. ALTO 5 FORI GRIGIO ANTRACITE	CHARCOAL GRAY FRONT GROUP COVER HIGH GR.	
05000811.GM	COPRIGRUPPO FRONT. GR. ALTO 5 FORI GRIGIO MEDIO	MEDIUM GRAY FRONT GROUP COVER HIGH GR.	01/03/2008
05000812.G	COPRIGRUPPO RETRO GR. ALTO GRIGIO STEEL	STEEL GRAY BACK GROUP COVER HIGH GR AURELIA	01/03/2008
05000812.GA	COPRIGRUPPO RETRO GR. ALTO GRIGIO ANTRACITE	CHARCOAL GRAY BACK GR COVER H.GR. AURELIA	
05000812.GM	COPRIGRUPPO RETRO GR. ALTO GRIGIO MEDIO	MEDIUM GRAY BACK GROUP COVER HIGH GR. AURELIA	01/03/2008
05000813.G	COPRIGRUPPO FR. GR. BASSO 5 FORI GRIGIO STEEL	STEEL GRAY FRONT GROUP COVER AURELIA	01/03/2008
05000813.GA	COPRIGRUPPO FR. GR. BASSO 5 FORI GRIGIO ANTRACITE	CHARCOAL GRAY FRONT GROUP COVER AURELIA	
05000813.GM	COPRIGRUPPO FR. GR. BASSO 5 FORI GRIGIO MEDIO	MEDIUM GRAY FRONT GROUP COVER AURELIA	01/03/2008
05000814.G	COPRIGRUPPO RETRO GR. BASSO GRIGIO STEEL	STEEL GREY BACK GROUP COVER LOW GR.	01/03/2008
05000814.GA	COPRIGRUPPO RETRO GR. BASSO GRIGIO ANTRACITE	CHARCOAL GREY BACK GROUP COVER LOW GR.	
05000814.GM	COPRIGRUPPO RETRO GR. BASSO GRIGIO MEDIO	MEDIUM GREY BACK GROUP COVER LOW GR.	01/03/2008
05000815	MANOPOLA VAPORE AURELIA	STEAM LEVER HANDLE	01/03/2008
05000817.G	MOSTRINA MANOMETRO-LIVELLO AURELIA GRIGIO STEEL	STEEL GREY FRONT WATER LEVEL COVER AURELIA	
05000817.GM	MOSTRINA MANOMETRO-LIVELLO AURELIA GRIGIO MEDIO	MEDIUM GREY FRONT WATER LEVEL COVER AURELIA	
05000818.G	COPRIGRUPPO FRONT. GR. ALTO 1 FORO GRIGIO STEEL	STEEL GREY FRONT GROUP COVER HIGH GR. 1 HOLE	01/03/2008
05000818.GA	COPRIGRUPPO FR. GR. ALTO 1 FORO GRIGIO ANTRACITE	CHARCOAL GREY FRONT GROUP COVER H.GR 1HOLE	
05000818.GM	COPRIGRUPPO FRONT. GR. ALTO 1 FORO GRIGIO MEDIO	MEDIUM GREY FRONT GROUP COVER HIGH GR. 1 HOLE	01/03/2008
05000819.G	COPRIGRUPPO FR. GR. BASSO 1 FORO GRIGIO STEEL	STEEL GREY FRONT GROUP COVER LOW GR. 1 HOLE	01/03/2008
05000819.GA	COPRIGRUPPO FR. GR. BASSO 1 FORO GRIGIO ANTRACITE	CHARCOAL GREY FRONT GROUP COVER LOW GR. 1 HOLE	
05000819.GM	COPRIGRUPPO FR. GR. BASSO 1 FORO GRIGIO MEDIO	MEDIUM GREY FRONT GROUP COVER LOW GR. 1 HOLE	01/03/2008
05000820.G	COPRIGRUPPO SERVIZI SX AURELIA GRIGIO STEEL	STEEL GREY LEFT SERVICES GROUP COVER AURELIA	01/03/2008
05000820.GAA	COPRIGR. SERVIZI SX GRIGIO ANTRACITE ASOLA AUTOST.	CH.GREY L.SERVICES GR COVER AURELIA AUTOSTEAM	
05000820.GM	COPRIGRUPPO SERVIZI SX AURELIA GRIGIO MEDIO	MEDIUM GREY LEFT SERVICES GROUP COVER AURELIA	01/03/2008
05000830	SUPPORTO PULSANT. SX SERVIZI + DISPLAY CON ASOLA	LEFT SERVICES PUSH-BUTTON SUPPORT + DISPLAY	01/03/2008
05000830.C	SUPPORTO PULSANT. SX SERVIZI	LEFT SERVICES PUSH-BUTTON SUPPORT	
05000832	SUPPORTO PULSANTIERA DX FINALE	RIGHT PUSH-BUTTON FINAL SUPPORT	
05000832.C	SUPPORTO PULSANT. DX FINALE SENZA ASOLA SCRITTA	R PUSH-BUTTON FINAL SUPPORT WITHOUT EYELET	
05000834	SUPPORTO PULSANTIERA CENTRALE L=230 SX	LEFT-CENTRAL PUSH-BUTTON SUPPORT L=230	
05000834.C	SUPPORTO PULSANT. CENTR. L230 SX SENZA ASOLA CEN.	LEFT-CENTRAL PUSH-BUTTON SUPP. L=230 NO EYEL.	
05000836	SUPPORTO PULSANTIERA CENTRALE	CENTRAL PUSH-BUTTON SUPPORT	
05000840	MANOPOLA PORTAFILTRO 2003 NERO	FILTER HOLDER KNOB 2003 BLACK	
05000842	CHIUSURA MANOPOLA PORTAFILTRO 2003	FILTER HOLDER KNOB LOCK 2003	
05000844	RIVESTIMENTO GOMMA NERA MANOPOLA PORTAFILTRO	BLACK RUBBER COVER FILTER HOLDER KNOB	
05000852	PELLICOLA ADESIVA PLUS 2 + DISPLAY SCORREVOLE	ADHESIVE FILM AURELIA PLUS 2 + DISPLAY	
05000853	PELLICOLA ADESIVA PLUS 3 + DISPLAY SCORREVOLE	ADHESIVE FILM AURELIA PLUS 3 + DISPLAY	
05000854	PELLICOLA ADESIVA PLUS 4 + DISPLAY SCORREVOLE	ADHESIVE FILM AURELIA PLUS 4 + DISPLAY	
05000856	PELLICOLA ADESIVA "AURELIA" PLUS 2	ADHESIVE FILM AURELIA PLUS 2	
05000857	PELLICOLA ADESIVA "AURELIA" PLUS 3	ADHESIVE FILM AURELIA PLUS 3	
05000858	PELLICOLA ADESIVA "AURELIA" PLUS 4	ADHESIVE FILM AURELIA PLUS 4	
05000862	PELLICOLA ADESIVA AURELIA V-S 2 GR.	ADHESIVE FILM AURELIA V-S 2 GR.	
05000863	PELLICOLA ADESIVA AURELIA V-S 3 GR.	ADHESIVE FILM AURELIA V-S 3 GR.	
05000864	PELLICOLA ADESIVA AURELIA V-S 4 GR.	ADHESIVE FILM AURELIA V-S 4 GR.	
05000866	PELLICOLA ADESIVA V-S 2 + DISPLAY SCORREVOLE	ADHESIVE FILM AURELIA V-S 2 GR + DISPLAY	
05000867	PELLICOLA ADESIVA V-S 3 + DISPLAY SCORREVOLE	ADHESIVE FILM AURELIA V-S 3 GR + DISPLAY	
05000868	PELLICOLA ADESIVA V-S 4 + DISPLAY SCORREVOLE	ADHESIVE FILM AURELIA V-S 4 GR + DISPLAY	
05000872	ALZATINA POGGIATAZZE AURELIA 2	CUPS PEDISTAL FOR 2 GR.	
05000873	ALZATINA POGGIATAZZE AURELIA 3	CUP PEDESTAL AURELIA 3 GR.	
05000874	ALZATINA POGGIATAZZE AURELIA 4	CUP PEDESTAL AURELIA 4 GR.	
05000878	CHIUSURA PROLUNGA PIEDE 2005 D.66 H=12	FOOT EXTENSION LOCK D.66 H=12	
05000880	PROLUNGA PIEDE ALTO 2005 D.66 H=80 mm.	TALL FOOT EXTENSION D.66 H=80 MM.	
05000892	CHIUSURA SICUR. PIANO LAVORO 2GR ABS-INOX	SAFETY COVER 2 GR ABS - STAINLESS STEEL	
05000893	CHIUSURA SICUR. PIANO LAVORO 3GR ABS-INOX	SAFETY COVER 3 GR ABS - STAINLESS STEEL	
05080035	PRESSA CAFFE' ABS MEL	PLASTIC COFFEE PRESS	
05340023	GRIGLIA NYLON 178x210	NYLON GRILL 178X210	
06200008	BECCO DUE VIE	TWO WAYS SPOUT	
06200081	ANELLO GRUPPO +SEDE OR CROMATO	CHROME GROUP RING AURELIA	
06200082	CORPO GRUPPO AURELIA	GROUP BODY AURELIA	
06200084	CROCIERA 5 VIE OTT. "AURELIA"	CROSSPIECE 5 WAYS BRASS "AURELIA"	
06200086	CORPO PORTAF. INCLINATO 2003	TILTED FILTER HOLDER BODY 2003	
07300012.M8	RACC. 1/4 1/4 GAS CON OR F.M8	CONNECTION 1/4 1/4 W/OR HOLE M8	
07300013	RACCORDO L 1/4 M-F CILIN 458	CONNECTION L 1/4 M-F CYLIN.	
07300017	RACCORDO 1/4 3/8 GAS OT.	FITTING 1/4 3/8 GAS OT.	
07300054	PISTONCINO 012X4 NEPLAX/RIT	SMALL PISTON 012X4 NEPLAX/RIT	
07300055	TAPPO PORTAMOLLA 3/8"-1/4"	SPRING HOLDER PLUG 3/8"-1/4"	
07300062	CORPO VALVOLA NEPLAX/RITEGNO AT. DA 1/4 GAS	NEPLAX VALVE BODY	
07300067	DADO RACCORDO 3/8 GAS D11	NUT CONNECTION 3/8 GAS D11	
07300068	RACCORDO L 3/8 M-M CILIN 459	CONNECTION L 3/8 M-M CYLIN 459	
07300091	RACCORDO T1/4 M-F-M CILIN.	T FITTING MFM 1/4	
07300092	BECCO UNA VIA CURVO	SINGLE SPOUT	
07300097	TERMINALE CHIUSO D 14	TERMINAL D.14	
07300099	RIDUZIONE 3/8 1/4 ES. 20	VACUUM RELIEF VALVE ADAPTER	
07300100.M8	ATTACCO SCARICO 1/4 VAS. SCAR.CON OR + INT. M8	DOWNLOAD FASTENING 1/4 DOWNLOAD TRAY WITH OR	
07300104	SPINOTTO RUB.VAPORE PR.	VALVE SHAFT VALVE SHAFT	
07300109	PREMISTOPPA LIVELLO PROGRAM	GLAND LEVEL PROGRAM	
07300110	TAPPO PORTA MOLLA R.V. PR.	SPRING HOLDER TAP	
07300112	ATTACCO RUB. ACQUA PROGRAM	FASTENING WATER PROGRAM TAP	
07300116	RACCORDO T 1/4 M-M-F	JOINT T1/4 M-M-F 465	
07300121	RACCORDO L 1/4 M-M CILIN 459	CONNECTION L 1/4 M-M CYLIN. 459	
07300125	GIGLER M8X8 F.0.8	GIGLEUR M8X8 F.0.8	
07300126	GIGLER M8X8 F.1.5	GIGLEUR M8X8 F.1,5	OPZIONAL
07300127	GIGLER M8X8 F.2.5	GIGLEUR M8X8 F.2,5	16/05/2007
07300128	TAPPO 1/4 GAS	CAP 1/4 GAS	
07300146	RACCORDO A T 3/8 M-F-M 463	CONNECTION A T 3/8 M-F-M 463	
07300166	FLANGIA CHIUSURA BLOCCHETTO PORTA ELETTROV.	BLOCK LOCK FLANGE SOLENOID VALVE HOLDER	
07300172	RACCORDO 3/8"M-3/8"M INT M8	PIPE FITTING 3/8"M-3/8"M INT M8	
07300183	PADIGLIONE GRUPPO PREMIER2002 h=3	GROUP HEAD CAP	OPZIONAL
07300183.4	PADIGLIONE GRUPPO PREMIER2002 h=4	DIFFUSER h=4	OPZIONAL
07300183.5	PADIGLIONE GRUPPO PREMIER2002 h=5	DIFFUSER h=5	
07300213.10	CORPO SCAMBIATORE 1/2 GAS F.10	EXCHANGER BODY 1/2 GAS F.10	
07300221	ASTA INOX RUBINETTO VAP. PRO97	STEAM VALVE INOX SCREW	
07300225	GIGLER M8X8 F.3 AG.28.05.93	GIGLEUR M8X8 F.3	
07300226	GIGLER M8X8 F.2	GIGLEUR M8X8 F.2	
07300229	GIGLER M8X8 F.0.5	GIGLEUR M8X8 F.0,5	OPZIONAL
07300231	GIGLER M8X8 F. 1,75	GIGLEUR M8X8 F.1,75	OPZIONAL

AURELIA

CODICE	DESCRIZIONE	DESCRIPTION	DATA FINE VALIDITA'	
07300292	ATTACCO RUBINETTO X LANCIA VAPORE SNODATA INOX	TAP FASTENING FOR FLEX. STAINLESS STEAM WAND		A
07300293	BUSSOLA SNODO OT. AG.25.06.96	BRASS BUSHING		U
07300295	DADO RACC. 3/8 LANCIA SNOD.	NUT		R
07300354	CORPO RUB. VAPORE x LANC. SNO.	STEAM KNOB BODY X FLEXIBLE WAND		E
07300355	FORCELLA RUBINETTO '99	TAP FORK		L
07300601	INSERTO MANOPOLA PORTAFILTRO 2003 INOX	FILTER HOLDER KNOB INSERTION 2003 STAINLESS		I
07300603	RACCORDO SUP. LIVELLO AURELIA	UPPER LEVEL CONNECTION AURELIA		A
07300605	PERNO ROTAZIONE INVOL. AURELIA	COVER ROTATION HINGE AURELIA		
07300606	DISTANZIALE FISSAGGIO FRONTALE GRUPPO AURELIA	FRONT FIXING GROUP SPACER AURELIA		
07300609	PERNO FISSAGGIO CARENA LATER. M6 L.7 BASSO	SIDE BOTTOM FIXING HINGE M6 L.7 LOW		
07300612	RACCORDO 1/4 1/4 GAS CON OR + BLOCCA VALV. RITEGNO	CONNECT. 1/4 1/4 GAS WITH OR + VALVE LOCK		
07300613	*INSERTO CAMERA PRE-INFUSIONE*	*PRE INFUSION CHAMBER CAP*	*OPZIONAL*	
07300619	INSERTO PROLUNGA PIEDE ALTO ES 20 L=70 + M10	INSERTION EXTENSION TALL FOOT ES 20 L=70 M10		
08000005	MOLLA 6 ST 11,5X8,5X25 RUB.VAPORE	STEAM VALVE SPRING		
08000015	ANELLO SEEGER TIPO RS 5 INOX UNI 7434	SEEGER RING RS 5 STAINLESS STEEL		
08000017	MOLLA BLOCCA FILTRO ACC.INOX	FILTER HOLDER SPRING INOX		
08000026	MOLLA TARATA D 11.4 F1.5 5.25SVALVOLA NEPLAX 95	CALIBRATED SPRING D 11.4 F1.5 NEPLAX VALVE		
08000027	MOLLA PER LANCIA SNODATA	WAND SPRING		
08000100	MOLLA INTERNA PIEDE 2005	FOOT INNER SPRING 2005		
09000005	SONDA AUTOLIVELLO COMPLETA L=130	WATER LEVEL SENSOR		
09000009	VETRO LIVELLO 112x12x1,5	SIGHT GLASS		
09000016	RUBINET.ALLACCIO RETE 3/8 M-F	TAP CONNECTION SUPPLY 3/8 M-F		
09000018	RUBINET.DISTRIBUTORE 1/4 M-F	DISPENSER TAP 1/4 M-F		
09100003	MANOMETRO DOPPIA SCALA	DOUBLE SCALE GAUGE		
09200006	PRESSOSTATO MACCHINA	PRESSOSTAT		
09200007	PRESSOSTATO MACCHINA UL	PRESSOSTAT		
09500004	TERMOSTATO R.MAN. 135øC	AUTOMATIC THERMOSTAT 135°C		
09500006	TERMOSTATO R.AUT. 55øC	THERMOSTAT 261 R.AUT. 55 C		
11600003	TUBO SILICONE 8x12 70Sh PEROX TRASPARENTE	SILICON TUBE 8X12 70SH PEROX TRANSPARENT		
14100012	RESISTENZA 5000W PR/3-4 GR. #	HEATING ELEM. 5000W		
14100031	RESISTENZA 4500W 220/380 L350	HEATING ELEMENT 4500W		
14100043	RESISTENZA SCALDATAZZE L=303 150W 230V	CUPS WARMER RESISTOR L=303 150W 230V		
14100044	RESISTENZA SCALDATAZZE L=188 150W 230V	CUPS WARMER RESISTOR L=188 150W 230V		
40200004	GUARN. SOTTOCOPPA CONICA 82/84 ShA	GROUP BAR GASKET		
72012007	VALVOLA NEPLAX COMPLETA	EXPANSION VALVE		
75006037.1	KIT LANCIA VAPORE SNODATA INOX INCLINATA	SWIWEL STEAM WAND KIT		
75006038	BECCO VAPORE M8,65x0,75 F. 1,5	STEAM TIP		
75010002	CORPO LIVELLO LAVORATO E CROMATO	METAL CASING FOR SIGHT GLASS		
82007003	ROMPIGETTO ACQUA CALDA D.23,5	HOT WATER DISPERSION NUT D.23,5		
98001006	PIEDE MACCHINA 06 BICOMPONENTE	MACHINE FEET		
98001007	KIT PIEDI ALTI AURELIA (4 PZ)	KIT TALL FEET AURELIA (4 PCS.)		
98004001	FILTRO INOX DIAM. 8	FILTER INOX DIAM. 8		
98004016	FILTRO INOX DIAM. 12	STAINLESS FILTER DIAM. 12		
980040500000000000	ASSIEME GR. EROGAZIONE AURELIA	COMBINED BREWING GR. AURELIA		
98005021	PORTAFILTRO INCLINATO COMP. 1	COMPLETE ERGONOMIC FILTERHOLDE1 SPOUT		
98005022	PORTAFILTRO INCLINATO COMP. 2	COMPLETE FILTERHOLDER 2 WAYS ERGONOMIC		
98005024	CORPO PORTAFILTRO INCLINATO + MANOPOLA	TILTED FILTERHOLDER +HANDLE		
98006010	KIT LANCIA VAPORE INOX DIRITTA 3ø VAPORE AURELIA	3RD INOX STEAM WAND KIT AURELIA		
98006015	TUBO TEFLON 4x6 INTERNO LANCIA VAPORE L=147 mm.	TEFLON TUBE 4X6 INSIDE STEAM WAND L=147 MM.		
98006020	RUBINETTO VAPORE +LANCIA INOX	STEAM TAP +WAND STAINLESS AURELIA		
98006021	ASSIEME MANOPOLA VAPORE "2004"	COMBINED STEAM KNOB "2004" RIGHT		
980060300000000000	ASSIEME ELETTROVALVOLA VAPORE 3a LANCIA	COMBINED 3RD STEAM WAND EV		
980060310000000000	ASSIEME ELETTROVALVOLA VAPORE AUTOSTEAM	COMBINED AUTOSTEAM WAND EV		
98006048	KIT LANCIA VAPORE TURBOCREAM	TURBOCREAM STEAM WAND KIT		
98007007	KIT LANCIA ACQUA C. INOX L=100SENZA ROMPIGETTO	KIT HOT WATER SS WAND L=100 WITHOUT SPRAYEND		
98007009	KIT LANCIA ACQUA C. INOX L=70 COMP. DI ROMPIGETTO	KIT HOT WATER STAINLESS WAND L=70 W/SPRAYEND		
980070200000000000	ASSIEME E.V. ACQUA FREDDA MISCELATORE	COMBINED COLD WATER MIXER EV		
980070300000000000	ASSIEME E.V. ACQUA CALDA MISCELATORE	COMBINED HOT WATER MIXER EV		
98008004	PISTONCINO CHIUSURA COMPLETO	COMPLETE STEAM VALVE PISTON		
98010030	ASSIEME LIVELLO AURELIA-APPIA	COMBINED LEVEL AURELIA-APPIA		
98013001	VALVOLA DI SICUREZZA COMPLETA	VALVOLA DI SICUREZZA COMPLETA		
98030052	CALDAIA 2GR D.180 Lt11 AURELIA	BOILER 2GR D.180 LT11 AURELIA		
980300520000000000	ASSIEME CALDAIA 2 GR. D.180 Lt.11	COMBINED BOILER 2 GR. D.180 LT.11		
98030053	CALDAIA 3GR D.180 Lt17 AURELIA	BOILER 3GR D.180 LT17 AURELIA		
980300530000000000	ASSIEME CALDAIA 3 GR. D.180 Lt.17	COMBINED BOILER 3 GR. D.180 LT.17		
98030054	CALDAIA 4GR D.180 Lt22 AURELIA	BOILER 4GR D.180 LT22 AURELIA		
980300540000000000	ASSIEME CALDAIA 4 GR. D.180 Lt.22	COMBINED BOILER 4 GR. D.180 LT.22		
98030055	TUBO TEFLON INT. SCAMBIATORE D.6 x 180 mm.	INT. TEFLON TUBE EXCHANGER D.6 X 180 MM.		
98030058	TUBO COLL. VALVOLA SICUREZZA AURELIA	CONNECTION TUBE SAFETY VALVE AURELIA		
98030059	TUBO 1/4 1/4 PRESSOS. AURELIA	TUBE 1/4 1/4 PRESSOSTAT AURELIA		
98030060	TUBO 3/8 1/4 CARICO CALDAIA AURELIA	TUBE 3/8 1/4 LOADING BOILER AURELIA		
98030061	CROCIERA RUBIN. + EV. LIVELLO AURELIA	CROSSPIECE TAP + EV. LEVEL AURELIA		
98030062	CROCIERA 2 GR. DOSATORI VOL.	CROSSPIECE 2 GR. VOL DOSERS		
98030063	CROCIERA 3 GR. DOSATORI VOL.	CROSSPIECE 3 GR. VOL DOSERS		
98030064	CROCIERA 4 GR. DOSATORI VOL.	CROSSPIECE 4 GR. VOL DOSERS		
98030065	TUBO D.8 1/4 1/4 L=50	TUBE D.8 1/4 1/4 L=50		
98030067	TUBO D.8 1/4 3/8 DOSATORE SX SCAMBIATORE V-PLUS	TUBE D.8 1/4 3/8 LEFT DOSER EXCHANGER AURELIA		
98030068	TUBO D.8 1/4 3/8 DOSATORE DX SCAMBIATORE V-PLUS	TUBE D.8 1/4 3/8 RIGHT DOSER EXCHANG. AURELIA		
98030069	TUBO D.8 1/4 SCARICO VALVOLA NEPLAX	TUBE D.8 1/4 DOWNLOAD VALVE NEPLAX		
98030070	TUBO D.8 1/4 3/8 COLL.SCAMBIAT SX AURELIA S	TUBE D.8 1/4 3/8 LEFT EXCHANGER AURELIA SEM		
98030071	TUBO D.8 1/4 3/8 COLL.SCAMBIAT DX AURELIA S	TUBE D.8 1/4 3/8 RIGHT EXCHANGER AURELIA SEM		
98030075	TUBO CAPILLARE 1/8-1/4 0,9x2x400 MANOMETRO- POMPA	CAPILLARY TUBE 1/8-1/4 0,9X2X400 MANOM.-PUMP		
98030076	TUBO MANOMETRO CALDAIA AURELIA	TUBE MANOMETER-BOILER AURELIA		
98030077	TUBO 3/8 3/8 LIVELLO SUP.	TUBE 3/8 3/8 UPPER LEVEL		
98030078	TUBO 3/8 3/8 LIVELLO INF.	TUBE 3/8 3/8 LOWER LEVEL		
98030079	TUBO VAPORE SX AURELIA	LEFT STEAM TUBE AURELIA		
98030080	TUBO VAPORE DX AURELIA	RIGHT STEAM TUBE AURELIA		
98030081	TUBO 1/4 3/8 CALD./ACQUA CALDA	TUBE 1/4 3/8 BOILER/HOT WATER		
98030082	TUBO 1/4 1/4ACQUA CAL. AURELIA	TUBE 1/4 1/4 HOT WATER AURELIA		
98030083	TUBO 1/4 1/4 VAPORE- EV VAP. CAPPUCCINATORE	TUBE 1/4 1/4 STEAM- STEAM CAPPUCCINATORE EV		
98030084	TUBO 3/8 - 1/4 CALDAIA-EV CAPP	TUBE 3/8 - 1/4 BOILER-STEAM EV		
98030085	TUBO SUP. GRUPPO BASSO AURELIA	UPPER TUBE LOW GROUP		
98030086	TUBO INF. GRUPPO BASSO AURELIA	LOWER TUBE LOW GROUP AURELIA		
98030087	TUBO SUP. GRUPPO ALTO AURELIA	UPPER TUBE AURELIA HIGH CUP		
98030088	TUBO INF. GRUPPO ALTO AURELIA	LOWER TUBE AURELIA HIGH CUP		
98030122	TUBO 3/8 SCARICO POZZETTO GR. AURELIA 2GR	TUBE 3/8 DOWNLOAD CATCH BASIN GR. AURELIA 2GR		
98030123	TUBO 3/8 SCARICO POZZETTO GR. AURELIA 3GR	TUBE 3/8 DOWNLOAD CATCH BASIN GR. AURELIA 3GR		
98030124	TUBO 3/8 SCARICO POZZETTO GR. AURELIA 4GR	TUBE 3/8 DOWNLOAD CATCH BASIN GR. AURELIA 4GR		