BUNN®

C, CT, CWTF Series
Including DV, APS/TC/TS, Single CW & Twins

Supercedes Operating Manuals:
10690.####; 10737.####; 10841.0000; 28182.0000; 36102.0000

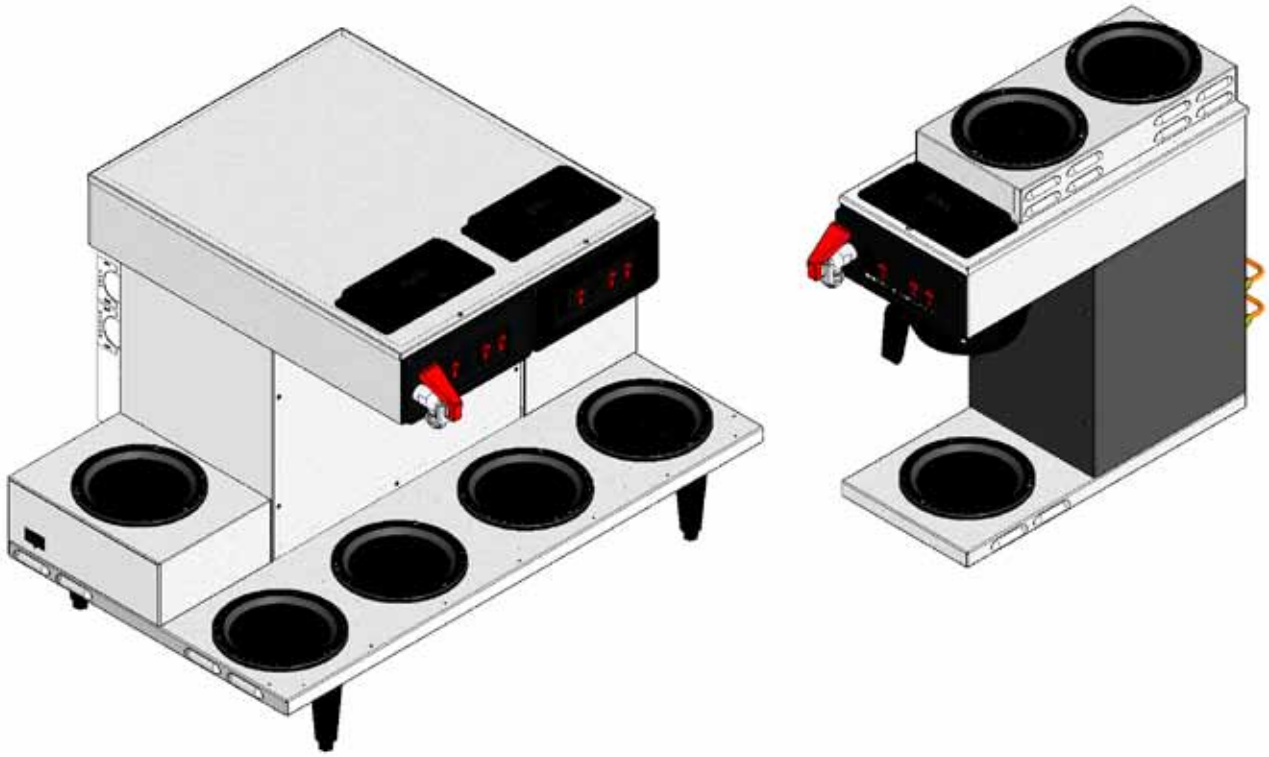

INSTALLATION & OPERATING GUIDE

BUNN-O-MATIC CORPORATION
POST OFFICE BOX 3227
SPRINGFIELD, ILLINOIS 62708-3227
PHONE: (217) 529-6601 FAX: (217) 529-6644

To ensure you have the latest revision of the Operating Manual, or to view the Illustrated Parts Catalog, Programming Manual, or Service Manual, please visit the Bunn-O-Matic website, at www.bunn.com. This is absolutely FREE, and the quickest way to obtain the latest catalog and manual updates. For Technical Service, contact Bunn-O-Matic Corporation at 1-800-286-6070.

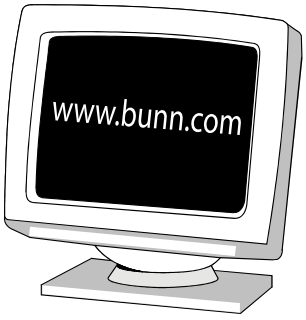

41721.0000C 05/12 ©2008 Bunn-O-Matic Corporation

BUNN-O-MATIC COMMERCIAL PRODUCT WARRANTY

Bunn-O-Matic Corp. ("BUNN") warrants equipment manufactured by it as follows:

1) Airpots, thermal carafes, decanters, GPR servers, iced tea/coffee dispensers, MCP/MCA pod brewers thermal servers and Thermofresh servers (mechanical and digital)- 1 year parts and 1 year labor.

2) All other equipment - 2 years parts and 1 year labor plus added warranties as specified below:

   a) Electronic circuit and/or control boards - parts and labor for 3 years.

   b) Compressors on refrigeration equipment - 5 years parts and 1 year labor.

   c) Grinding burrs on coffee grinding equipment to grind coffee to meet original factory screen sieve analysis - parts and labor for 4 years or 40,000 pounds of coffee, whichever comes first.

These warranty periods run from the date of installation BUNN warrants that the equipment manufactured by it will be commercially free of defects in material and workmanship existing at the time of manufacture and appearing within the applicable warranty period. This warranty does not apply to any equipment, component or part that was not manufactured by BUNN or that, in BUNN's judgment, has been affected by misuse, neglect, alteration, improper installation or operation, improper maintenance or repair, non periodic cleaning and descaling, equipment failures related to poor water quality, damage or casualty. In addition, the warranty does not apply to replacement of items subject to normal use including but not limited to user replaceable parts such as seals and gaskets. This warranty is conditioned on the Buyer 1) giving BUNN prompt notice of any claim to be made under this warranty by telephone at (217) 529-6601 or by writing to Post Office Box 3227, Springfield, Illinois 62708-3227; 2) if requested by BUNN, shipping the defective equipment prepaid to an authorized BUNN service location; and 3) receiving prior authorization from BUNN that the defective equipment is under warranty.

THE FOREGOING WARRANTY IS EXCLUSIVE AND IS IN LIEU OF ANY OTHER WARRANTY, WRITTEN OR ORAL, EXPRESS OR IMPLIED, INCLUDING, BUT NOT LIMITED TO, ANY IMPLIED WARRANTY OF EITHER MERCHANTABILITY OR FITNESS FOR A PARTICULAR PURPOSE. The agents, dealers or employees of BUNN are not authorized to make modifications to this warranty or to make additional warranties that are binding on BUNN. Accordingly, statements by such individuals, whether oral or written, do not constitute warranties and should not be relied upon.

If BUNN determines in its sole discretion that the equipment does not conform to the warranty, BUNN, at its exclusive option while the equipment is under warranty, shall either 1) provide at no charge replacement parts and/or labor (during the applicable parts and labor warranty periods specified above) to repair the defective components, provided that this repair is done by a BUNN Authorized Service Representative; or 2) shall replace the equipment or refund the purchase price for the equipment.

THE BUYER'S REMEDY AGAINST BUNN FOR THE BREACH OF ANY OBLIGATION ARISING OUT OF THE SALE OF THIS EQUIPMENT, WHETHER DERIVED FROM WARRANTY OR OTHERWISE, SHALL BE LIMITED, AT BUNN'S SOLE OPTION AS SPECIFIED HEREIN, TO REPAIR, REPLACEMENT OR REFUND.

In no event shall BUNN be liable for any other damage or loss, including, but not limited to, lost profits, lost sales, loss of use of equipment, claims of Buyer's customers, cost of capital, cost of down time, cost of substitute equipment, facilities or services, or any other special, incidental or consequential damages.

392, AutoPOD, AXIOM, BrewLOGIC, BrewMETER, Brew Better Not Bitter, BrewWISE, BrewWIZARD, BUNN Espress, BUNN Family Gourmet, BUNN Gourmet, BUNN Pour-O-Matic, BUNN, BUNN with the stylized red line, BUNNlink, Bunn-OMatic, Bunn-O-Matic, BUNNserve, BUNNSERVE with the stylized wrench design, Cool Froth, DBC, Dr. Brew stylized Dr. design, Dual, Easy Pour, EasyClear, EasyGard, FlavorGard, Gourmet Ice, Gourmet Juice, High Intensity, iMIX, Infusion Series, Intellisteam, My Café, Phase Brew, PowerLogic, Quality Beverage Equipment Worldwide, Respect Earth, Respect Earth with the stylized leaf and coffee cherry design, Safety-Fresh, savemycoffee.com, Scale-Pro, Silver Series, Single, Smart Funnel, Smart Hopper, SmartWAVE, Soft Heat, SplashGard, The Mark of Quality in Beverage Equipment Worldwide, ThermoFresh, Titan, trifecta, Velocity Brew, A Partner You Can Count On, Air Brew, Air Infusion, Beverage Bar Creator, Beverage Profit Calculator, Brew better, not bitter., BUNNSource, Coffee At Its Best, Cyclonic Heating System, Daypart, Digital Brewer Control, Nothing Brews Like a BUNN, Pouring Profits, Signature Series, Tea At Its Best, The Horizontal Red Line, Ultra are either trademarks or registered trademarks of Bunn-O-Matic Corporation.

INTRODUCTION

This equipment will brew one or two half-gallon batches of coffee simultaneously into awaiting dispensers (with just the press of a button). One side may include a hot water faucet for allied beverage use. It is only for indoor use on a sturdy counter.

USER NOTICES 4

ELECTRICAL REQUIREMENTS 5

PLUMBING REQUIREMENTS (CURRENT SINGLES) 6

PLUMBING REQUIREMENTS (CURRENT TWINS) 7

PLUMBING REQUIREMENTS (EARLY SINGLES) 8

PLUMBING REQUIREMENTS (EARLY TWINS) 9

INITIAL SET-UP 10

ADJUSTING BREW VOLUMES 11

OPERATING CONTROLS 12

BREWING 14

CLEANING 15

TROUBLESHOOTING 12

Explanation of codes:

15 - All components in machine are rated for 120 Volts ac, (15 Amps)
20 - All components in machine are rated for 120 Volts ac, (20 Amps)
35 (120/240V) - Tank heater rated for 240 volts ac, all other components rated for 120 volts ac (20 Amps)
DV - Dual Voltage. 2 tank heaters with toggle switch
MV - Multi Voltage. 2 tank heaters with terminal block. (Replaced by DV)
A - All components in machine are rated for 240 volts ac.
B - All components are rated for either 100 volts ac, or 200 volts ac.
C - Canadian models only
CE - European models only.
TWIN - 2 brewers in 1 chassis.
APS - Airpot Server (No warmers)
TC - Thermal Carafe (No warmers)
TS - Thermal Server (No warmers)

USER NOTICES

Carefully read and follow all notices in this manual and on the equipment. All labels on the equipment should be kept in good condition. Replace any unreadable or damaged labels.

As directed in the International Plumbing Code of the International Code Council and the Food Code Manual of the Food and Drug Administration (FDA), this equipment must be installed with adequate backflow prevention to comply with federal, state and local codes. For models installed outside the U.S.A., you must comply with the applicable Plumbing /Sanitation Code for your area.

#00656.0001

WARNING

FUNNEL CONTENTS ARE HOT

DISCARD DECANTER IF:
- CRACKED
- SCRATCHED
- BOILED DRY
- HEATED WHEN EMPTY USED ON HIGH FLAME OR EXPOSED ELECTRIC ELEMENTS

READ THE ENTIRE OPERATING MANUAL BEFORE USING THIS PRODUCT
FAILURE TO COMPLY RISKS INJURY

PN: 00658.0000F 6/98 © 1985 BUNN-O-MATIC CORPORATION

#00658.0000

WARNING

- Fill water tank before turning - on - thermostat or connecting appliance to power source.
- Use only on a properly protected circuit capable of the rated load.
- Electrically ground the chassis.
- Follow national/local electrical codes.
- Do not use near combustibles.

FAILURE TO COMPLY RISKS EQUIPMENT DAMAGE, FIRE, OR SHOCK HAZARD

READ THE ENTIRE OPERATING MANUAL BEFORE BUYING OR USING THIS PRODUCT

THIS APPLIANCE IS HEATED WHENEVER CONNECTED TO A POWER SOURCE

00831.0000F 3/98 ©1998 BUNN-O-MATIC CORPORATION

#00831.0000

WARNING
REMOVE FUNNEL
SLOWLY

#03408.0002

WARNING
HOT
LIQUID

#03409.0002

WARNING

To reduce the risk of electric shock, do not remove or open cover.
No user-serviceable parts inside.
Authorized service personnel only.
Disconnect power before servicing.

#37881.0000

CAUTION WARMERS AND SURFACES ARE HOT

#02765.0000

Optional Field Wiring

120/208-240 V, 11.4-13.1 A, 2340-3100 W
1PH, 3-Wire + GND, 60HZ

#34955.0000
APS MODELS

#00824.0002

Optional Field Wiring

120/208-240 V, 12.25-13.9 A, 2440-3200 W
1PH, 3-Wire + GND, 60HZ

#34955.0001
ONE WARMER MODELS

Optional Field Wiring

120/208-240 V, 13.0-14.8 A, 2540-3300 W
1PH, 3-Wire + GND, 60HZ

#34955.0002
TWO WARMER BREWERS

Optional Field Wiring

120/208-240 V, 13.9-15.6 A, 2640-3400 W
1PH, 3-Wire + GND, 60HZ

#34955.0003
THREE WARMER BREWERS

CAUTION WARMERS AND SURFACES ARE HOT

#12364.0000

120V
120/208-240V

#34056.0000
VOLTAGE SELECTOR SWITCH

ELECTRICAL REQUIREMENTS

CAUTION - The brewer must be disconnected from the power source until specified in *Initial Set-Up.*

Model 15 has an attached cordset and requires 2-wire grounded service rated 120 volts ac, 15 amp, single phase, 60 Hz.

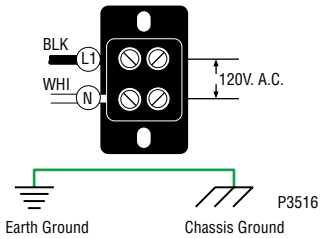

Model 20

Requires 2-wire, grounded service rated 120 volts ac, 20 amp, single phase, 60 Hz. Proceed as follows:

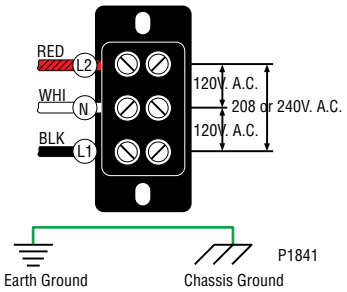

Model 35

Note: This electrical service consists of 3 current carrying conductors (Neutral, L1 and L2) and a separate conductor for earth ground.

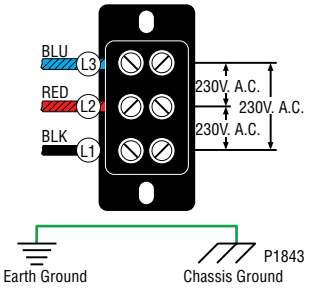

230V ac
3 phase models

Note: This electrical service consists of 3 current carrying conductors (L1, L2 and L3) and a separate conductor for earth ground.

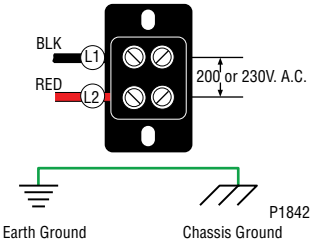

200 or 230V ac
single phase models

P1842

Note: This electrical service consists of 2 current carrying conductors (L1 and L2) and a separate conductor for earth ground.

NOTE: Some Twins require two individual power cords.

CE REQUIREMENTS:

- This appliance must be installed in locations where it can be overseen by trained personnel.
- For proper operation, this appliance must be installed where the temperature is between 5°C to 35°C.
- Appliance shall not be tilted more than 10° for safe operation.
- An electrician must provide electrical service as specified in conformance with all local and national codes.
- This appliance must not be cleaned by water jet.
- This appliance is not intended for use by persons (including children) with reduced physical, sensory or mental capabilities, or lack of experience and knowledge, unless they have been given instructions concerning use of this appliance by a person responsible for its safety.
- Children should be supervised to ensure they do not play with the appliance.
- If the power cord is ever damaged, it must be replaced by the manufacturer or authorized service personnel with a special cord available from the manufacturer or its authorized service personnel in order to avoid a hazard.
- Machine must not be immersed for cleaning..

ELECTRICAL HOOK-UP

CAUTION – Improper electrical installation will damage electronic components.

1. An electrician must provide electrical service as specified.
2. Using a voltmeter, check the voltage and color coding of each conductor at the electrical source.
3. Place the heater switche(s) at the rear of the brewer in the "OFF" lower position.
4. Remove the front panel beneath the sprayheads. (On Dual Volt models, place the voltage select toggle switch to the corresponding voltage position being used. FIG 5-1).
5. Feed the cord through the strain relief(s) and connect it to the terminal block(s).
6. Connect the brewer to the power source and verify the voltage at the terminal block before proceeding. Replace the front panel.
7. If plumbing is to be hooked up later be sure the brewer is disconnected from the power source. If plumbing has been hooked up, the brewer is ready for *Initial Set-Up*.

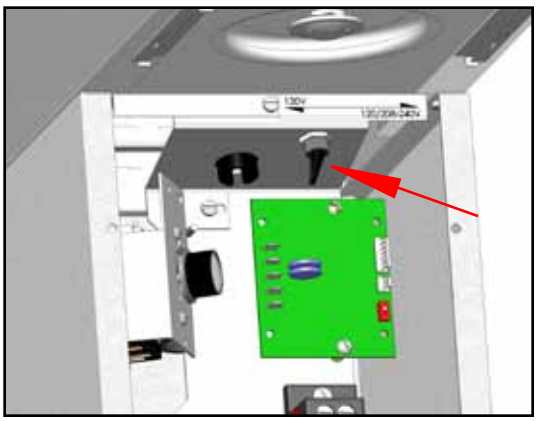

FIG. 5-1 Dual Volt Switch Position

PLUMBING REQUIREMENTS-CURRENT SINGLES

As directed in the International Plumbing Code of the International Code Council and the Food Code Manual of the Food and Drug Administration (FDA), this equipment must be installed with adequate backflow prevention to comply with federal, state and local codes. For models installed outside the U.S.A., you must comply with the applicable Plumbing /Sanitation Code for your area.

MODEL C:

This model is completely portable and requires no attached plumbing.

MODELS CT, CTF, CWT, CWTA, CWTB, CWTF, CWTFA & CWTFB, SINGLE CW & SINGLE CWF

These brewers must be connected to a cold water system with operating pressure between 20 and 90 psi (138 to 620kPa) from a ½" or larger supply line. A shut-off valve should be installed in the line before the brewer. Install a regulator in the line when pressure is greater than 90 psi (620kPa)to reduce it to 50 psi (345kPa). The water inlet fitting is ¼" flare.

NOTE - Bunn-O-Matic recommends ¼" copper tubing for installations of less than 25 feet and ⅜" for more than 25 feet from the ½" water supply line. A tight coil of tubing in the water line will facilitate moving the brewer to clean the countertop. Bunn-O-Matic does not recommend the use of a saddle valve to install the brewer. The size and shape of the hole made in the supply line by this type of device may restrict water flow.

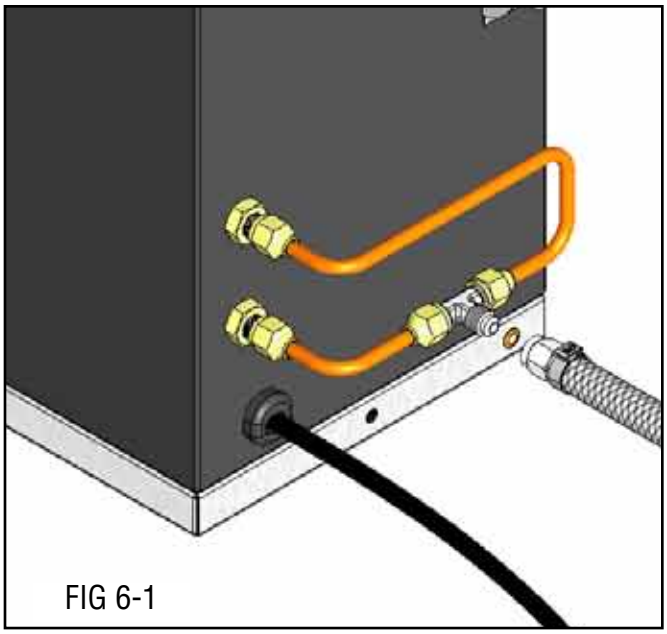

FIG 6-1

Models CTF & CWTF

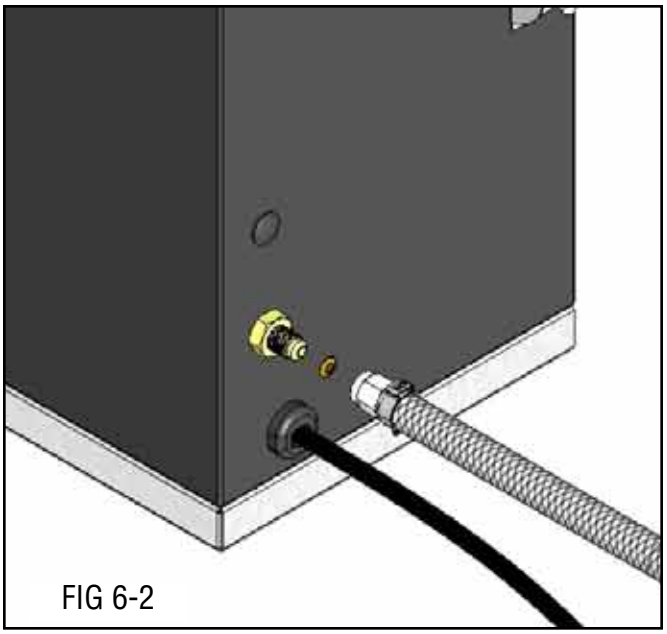

FIG 6-2

Models CT & CWT

PLUMBING REQUIREMENTS-CURRENT TWINS

TWINS

These brewers must be connected to a cold water system with operating pressure between 20 and 90 psi (138 and 620 kPa) from a ½" or larger supply line. A shut-off valve should be installed in the line before the brewer. Install a regulator in the line when pressure is greater than 90 psi (620 kPa) to reduce it to 50 psi (345 kPa) . The water inlet fitting is ⅜" flare.

1. Remove six screws securing rear utility cover (if equipped). FIG 7-1
2. Remove cap from the flared fitting on the bottom of the center tube assembly.
3. Flush the water line and securely attach it to the flare fitting on the center tube assembly. FIG 7-2
4. Turn on the water supply.
5. Re-install rear utility cover. FIG 7-3
6. On models with faucet, place an empty vessel beneath the faucet and lift the handle until water is dispensed.

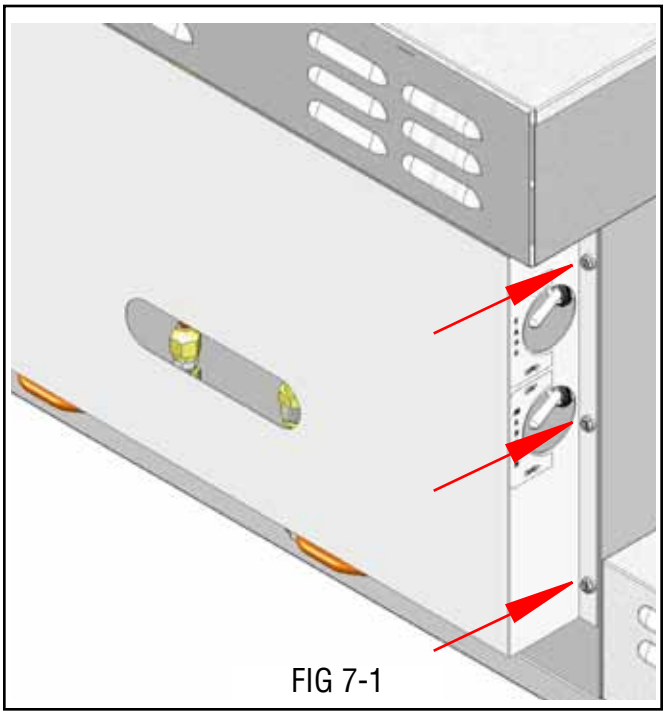

FIG 7-1

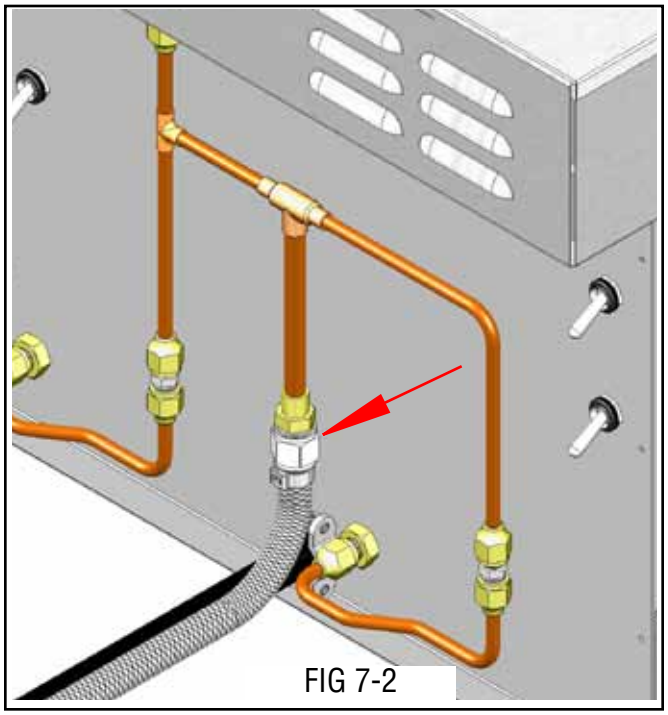

FIG 7-2

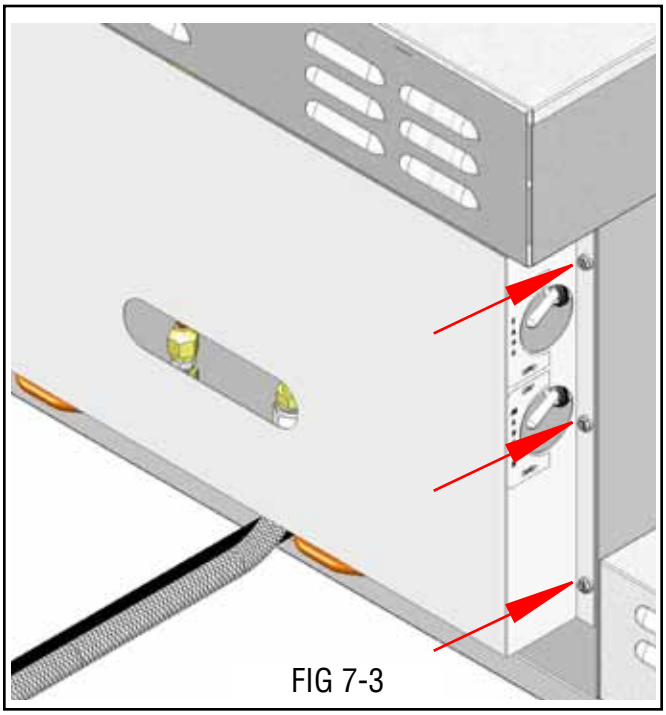

FIG 7-3

PLUMBING REQUIREMENTS-EARLY SINGLES

As directed in the International Plumbing Code of the International Code Council and the Food Code Manual of the Food and Drug Administration (FDA), this equipment must be installed with adequate backflow prevention to comply with federal, state and local codes. For models installed outside the U.S.A., you must comply with the applicable Plumbing /Sanitation Code for your area.

MODEL C:

This model is completely portable and requires no attached plumbing.

MODELS CT, CTF, CWT, CWTA, CWTB, CWTF, CWTFA & CWTFB, SINGLE CW & SINGLE CWF

These brewers must be connected to a cold water system with operating pressure between 20 and 90 psi (138 to 620kPa) from a ½" or larger supply line. A shut-off valve should be installed in the line before the brewer. Install a regulator in the line when pressure is greater than 90 psi (620kPa)to reduce it to 50 psi (345kPa). The water inlet fitting is ¼" flare.

NOTE - Bunn-O-Matic recommends ¼" copper tubing for installations of less than 25 feet and ⅜" for more than 25 feet from the ½" water supply line. A tight coil of tubing in the water line will facilitate moving the brewer to clean the countertop. Bunn-O-Matic does not recommend the use of a saddle valve to install the brewer. The size and shape of the hole made in the supply line by this type of device may restrict water flow.

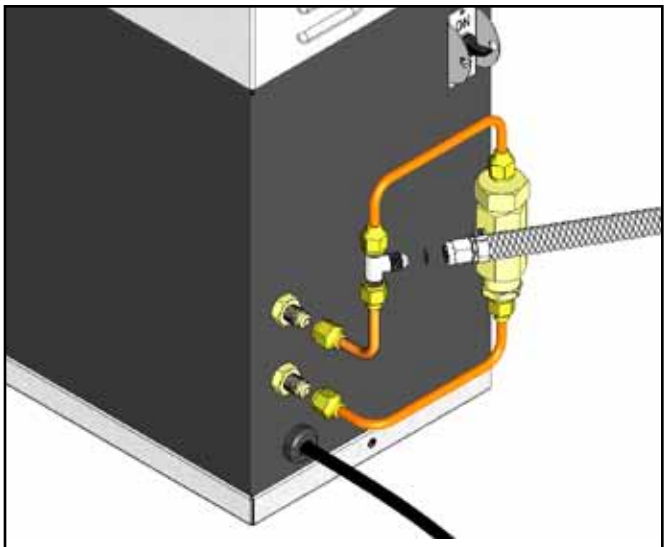

FIG 8-1

Models CTF & CWTF

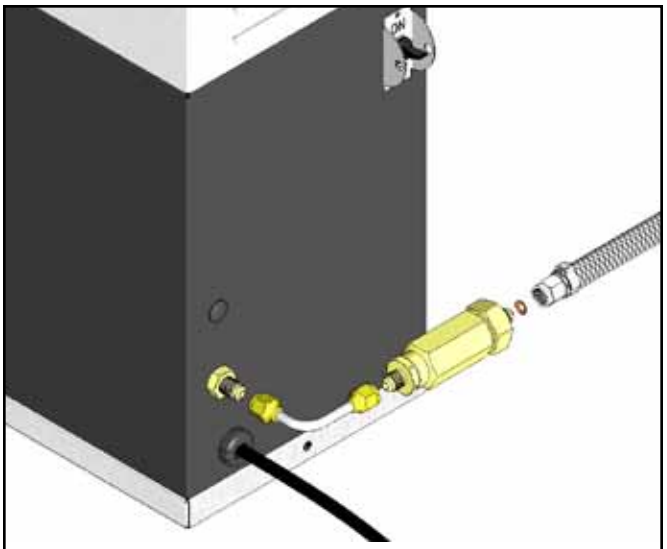

FIG 8-2

Models CT & CWT

PLUMBING REQUIREMENTS-EARLY TWINS

TWINS

These brewers must be connected to a cold water system with operating pressure between 20 and 90 psi (138 and 620 kPa) from a ½" or larger supply line. A shut-off valve should be installed in the line before the brewer. Install a regulator in the line when pressure is greater than 90 psi (620 kPa) to reduce it to 50 psi (345 kPa) . The water inlet fitting is ⅜" flare.

TWINS

1. Remove six screws securing rear utility cover (if equipped). FIG 9-1
2. Remove cap from the flared fitting on the bottom of the center tube assembly.
3. Flush the water line and securely attach it to the flare fitting on the center tube assembly. FIG 9-2
4. Turn on the water supply.
5. Re-install rear utility cover. FIG 9-3
6. On models with faucet, place an empty vessel beneath the faucet and lift the handle until water is dispensed.

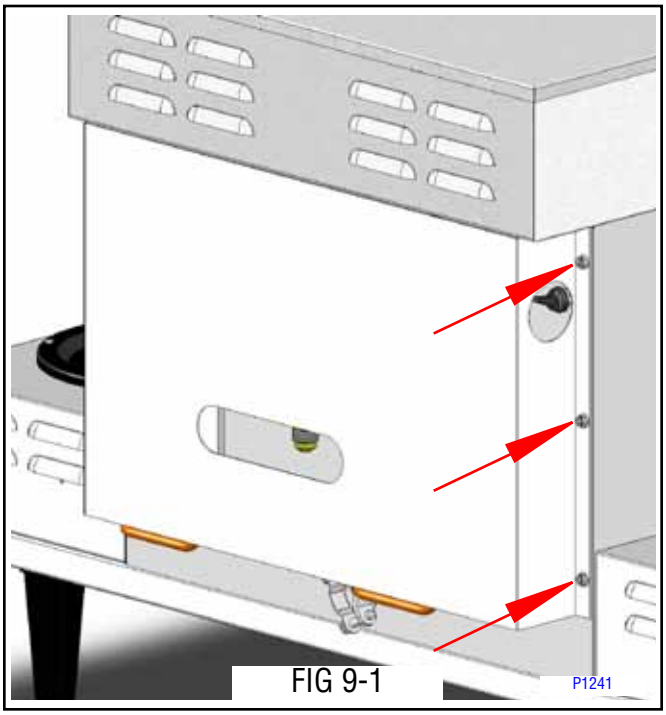

FIG 9-1

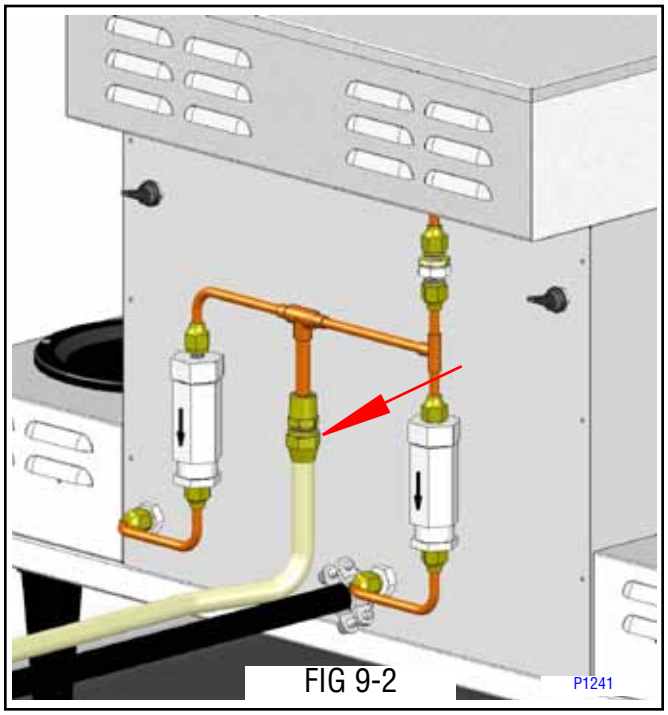

FIG 9-2

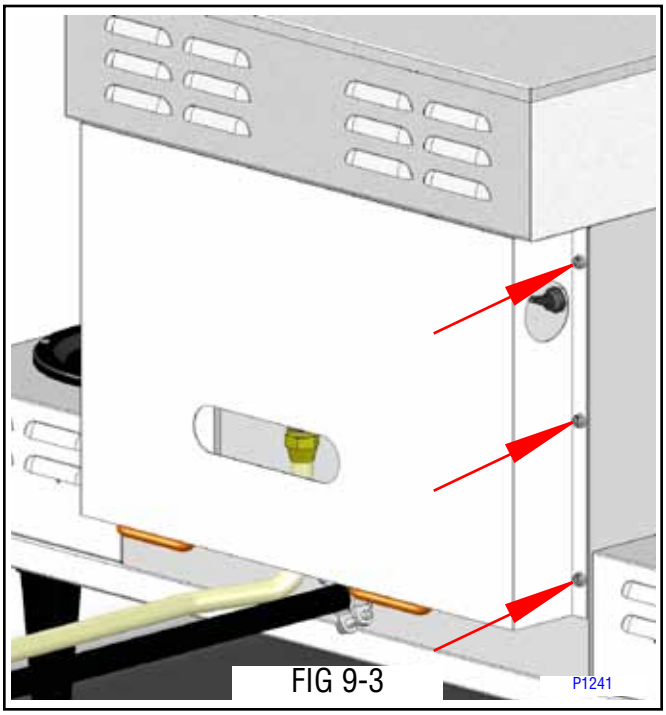

FIG 9-3

INITIAL SET-UP

CAUTION - The brewer must be disconnected from the power source throughout the initial set-up, except when specified in the instructions.

1. Insert an empty funnel into the funnel rails.
2. Place an empty dispenser under the funnel.
3. Place the heater switch at the rear of the brewer in the “OFF” lower position and connect the brewer to the power source.
4. Fill the tank with water as directed:

   4A. **Model C**

   Pour three pitchers of tap water into the screened area on top of the brewer. Allow approximately two minutes between pitchers for water to flow into the tank. While the third pitcher of water is entering the tank, the tank will fill to capacity and the excess will flow from the sprayhead, out of the funnel, and into the dispenser.

   4B. **Models CT, CTF, CWT, CWTA, CWTB, CWTF, CWTFA, CWTFB, SINGLE CW & SINGLE CWF**

   Connect the brewer to the power source, place the "ON/OFF" switch in the "ON" upper position, and momentarily press and release the start switch. Water will begin flowing into the tank. When water stops flowing into the tank, initiate a second and a third brew cycle. During the third brew cycle the tank will fill to its capacity and the excess will flow from the sprayhead, out of the funnel, and into the dispenser.
5. When the flow of water from the funnel stops, place the heater switch at the rear of the brewer in the “ON” upper position and wait approximately twenty minutes for the water in the tank to heat to the proper temperature. Some water will drip from the funnel during this time; this is due to expansion and should not occur thereafter.
6. Empty the dispenser and initiate another brew cycle as directed:

   6A. **Model C**

   Pour one pitcher of tap water into the screened area on top of the brewer.

   6B. **Models CT, CTF, CWT, CWTA, CWTB, CWTF, CWTFA, CWTFB, SINGLE CW & SINGLE CWF**

   Place the "ON/OFF" switch in the "ON" upper position, and on models SINGLE CW and SINGLE CWF place the batch selector switch in the "1 GAL" position. Momentarily press and release the start switch.
7. Place the "ON/OFF" switch in the lower “OFF” position after water has stopped flowing from the funnel, and let the water in the tank reheat to the proper temperature.
8. Empty the dispenser; place the "ON/OFF" switch in the "ON" upper position, and momentarily press and release the start switch. Check the water volume in the dispenser after water has stopped flowing from the funnel. It should be 64 ounces for all models except SINGLE CW and SINGLE CWF should be 128 ounces.
9. Models SINGLE CW and SINGLE CWF only, place the batch selector switch in the "1/2 GAL" position, and momentarily press and release the start switch. Check the water volume in the dispenser after water has stopped flowing from the funnel. It should be 64 ounces.
10. If water volumes are not correct, adjust the brew timer as required. See *Adjusting Brew Volumes*. Allow the water to reheat. Start, and measure another brew cycle.
11. Repeat step 10 until correct water volume is achieved.

N**OTE:** For all Twins, repeat steps 1 through 10 for the other side.

12. The brewer is now ready for use in accordance with the coffee brewing instructions.

ADJUSTING BREW VOLUMES

NOTE: Check that the brewer is connected to water supply, the tank is properly filled, and a funnel and server or decanter are in place, prior to setting or modifying batch sizes.

1. **Modifying batch sizes.** To modify a batch volume, first check that the SET/LOCK switch is in the “SET” position on the circuit board. If the brewer has a batch selector switch, position it to the size to be changed.

0 **To increase a batch size,** Press and hold the START or BREW switch until three clicks are heard. Release the switch (Failure to release the switch within two seconds after the third click causes the volume setting to be aborted and previous volume setting will remain in memory) and press it again one or more times. Each time

the switch is pressed, two seconds are added to the brew time period. Allow the brew cycle to finish in order to verify that the desired volume has been achieved.

To decrease a batch size, Press and release the START or BREW switch once for every two-second interval to be removed from the total brew time period; then immediately press and hold down the START or BREW switch until three clicks are heard. Release the switch. (Failure to release the switch within two seconds after the third click causes the volume setting to be aborted and previous volume setting will remain in memory). Allow the brew cycle to finish in order to verify that the desired volume has been achieved.

2. **Setting batch sizes.** To set a batch volume, first check that the SET/LOCK switch is in the "SET" position on the circuit board. Press and hold the START or BREW switch until three distinct clicks are heard (this will take approximately ten seconds), and then release the switch. (Failure to release the switch within two seconds after the third click causes the volume setting to be aborted and previous volume setting will remain in memory). View the level of the liquid being dispensed. When the desired level is reached, turn the ON/OFF switch to "OFF". The brewer remembers this volume and will continue to brew batches of this size until the volume setting procedure is repeated. Empty server(s), turn selector switch to positions that have yet to be set, and repeat batch setting procedure until all batch sizes are set.

NOTE: When brewing coffee, batch volumes will decrease due to absorption by the coffee grounds.

3. **Setting programming disable feature.** If it becomes necessary to prevent anyone from changing brew times once programmed, you can set the SET/LOCK switch to the "LOCK" position. This will prevent any programming to be done.

NOTE: If the clicks can not be heard, lightly grip the incoming water line to feel when the valve cycles on and off.

THERMOSTAT

In most locations the thermostat should be turned to the full clockwise postion (200° F) for optimum brewing temperature. In areas of high altitude you may have to turn it down (counterclockwise) to prevent boiling.

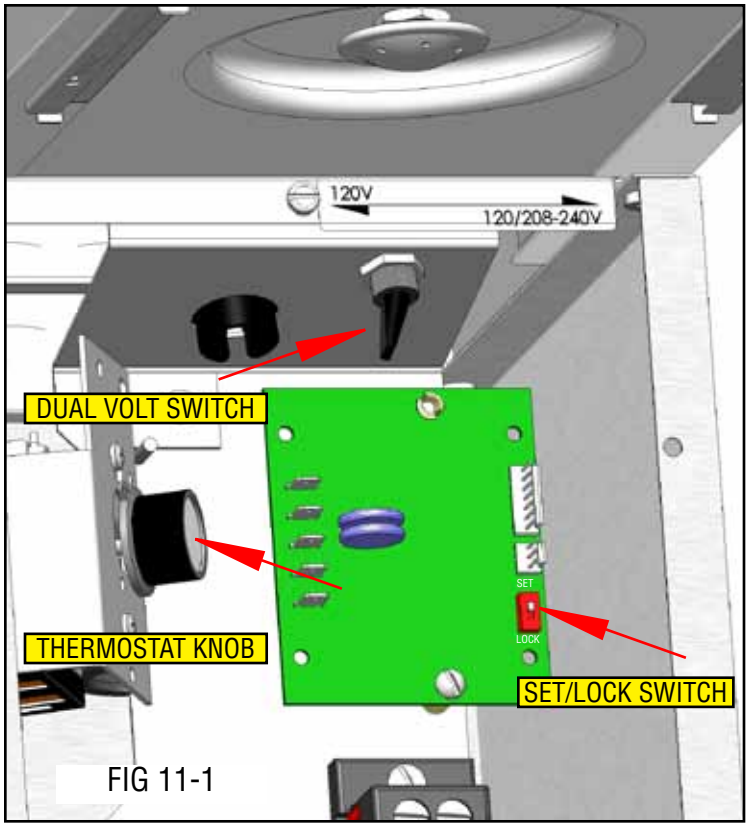

FIG 11-1

NOTICE

Brew water temperature is factory set at 200° F (93.3° C) Areas of high altitude will require lowering this temperature to prevent boiling. This chart should be used as a guide when readjusting the brew water temperature.

Altitude (Feet)	Boiling point of water ° F	° C	Recommended water temperature ° F	° C
-1000	213.8	101.0	200	93.3
-500	212.9	100.5	200	93.3
0	212.0	100.0	200	93.3
500	211.1	99.5	200	93.3
1000	210.2	99.0	200	93.3
1500	209.3	98.5	200	93.3
2000	208.4	98.0	200	93.3
2500	207.4	97.4	200	93.3
3000	206.5	96.9	199	92.8
3500	205.6	96.4	198	92.2
4000	204.7	95.9	197	91.7
4500	203.8	95.4	196	91.1
5000	202.9	94.9	195	90.6
5500	201.9	94.4	195	90.6
6000	201.0	93.9	194	90.0
6500	200.1	93.4	193	89.4
7000	199.2	92.9	192	88.9
7500	198.3	92.4	191	88.3
8000	197.4	91.9	190	87.8
8500	196.5	91.4	189	87.2
9000	195.5	90.8	188	86.7
9500	194.6	90.3	187	86.1
10000	193.7	89.8	186	85.6

35665.0000A 05/04 © 2004 Bunn-O-Matic Corporation

OPERATING CONTROLS

ON/LOWER SWITCH

Placing the "ON/LOWER" switch in the "OFF" (lower) position stops brewing. Stopping a brew cycle after it has been started, will not stop the flow of water into the funnel until the tank siphons down to its proper level. Placing the switch in the "ON" (upper) position enables the brew circuit and on all (*except* APS/TC models) supplies power to the brew station warmer.

START SWITCH

Momentarily pressing and releasing the switch starts a brew cycle. **DO NOT HOLD START SWITCH.**
NOTE – The "ON/OFF" switch must be in the "ON" upper position to initiate and complete a brew cycle.
NOTE – Some TWINS are equiped with auxiliary brew start switches on each side of brewer. Use care not to place other items too close to start switches so they don't block or accidently start a brew cycle! FIG 11-1

FLIP LID (POUR IN FEATURE)

Place server under brew funnel. Open flip lid to pour in (water only). **DO NOT POUR IN COFFEE!**
WARNING: DO NOT USE THE POUR IN FEATURE *AND* START SWITCH SIMULTANEOUSLY, OVER FLOWING OF HOT WATER WILL OCCUR!

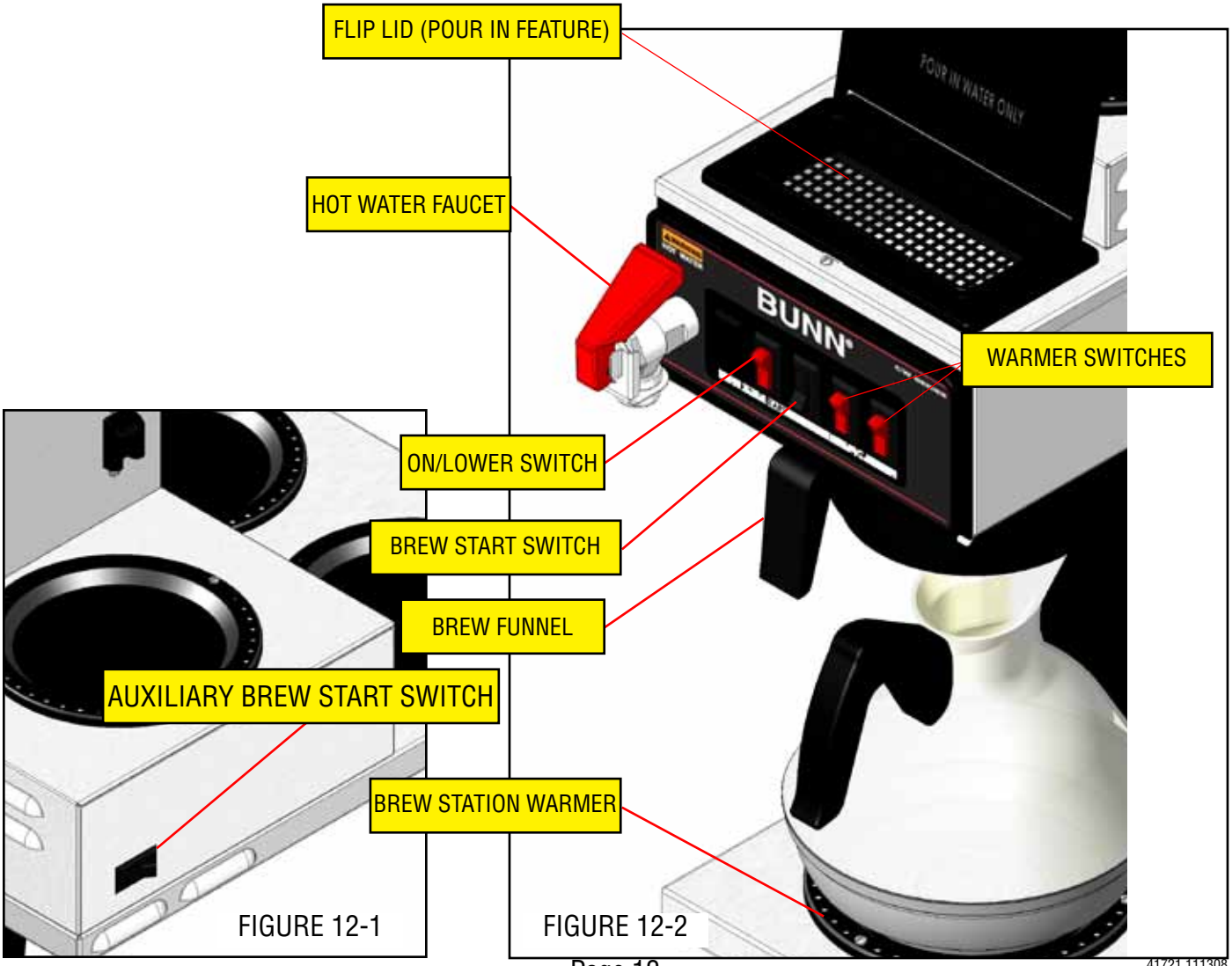

FIGURE 12-1 FIGURE 12-2

41721 111308

OPERATING CONTROLS

MASTER ON/OFF SWITCH(S)

The master ON/OFF switch disables power the entire brewer (including tank heaters).

NOTE – TWINS with 2 power cords will have 2 power switches, (one left, one right).

TANK HEATER ON/OFF SWITCH(S)

The tank heater ON/OFF switch disables power to the tank heater circuits only. Power to brew timer and warmer circuits are not affected. All Twins have 2 tank heater switches. **NOTE:** Leaving the tank heater switch(s) off will result in brewing with cold water.

LATE MODEL SWITCHS

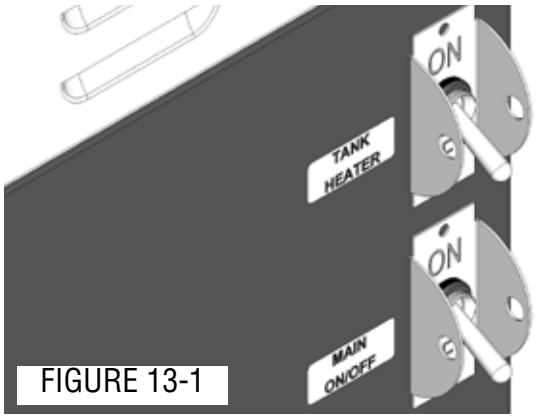

FIGURE 13-1

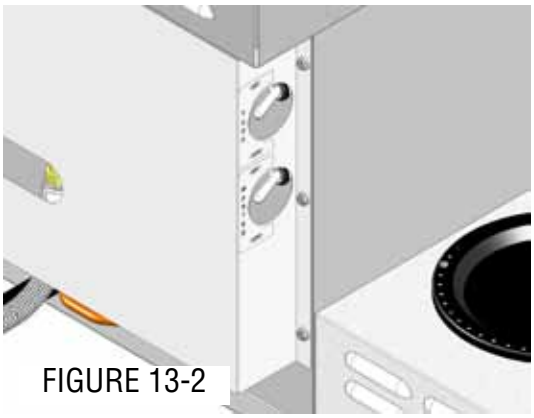
FIGURE 13-2

EARLY MODEL SWITCHS

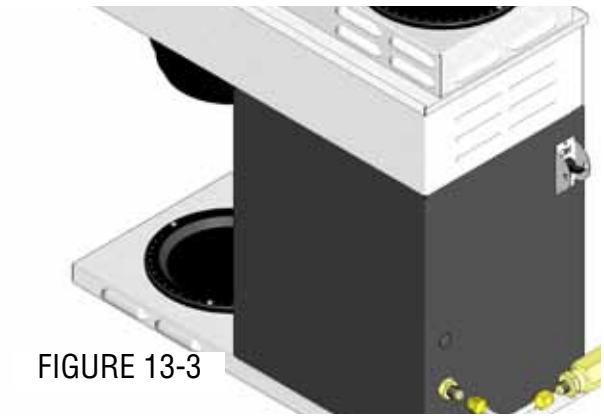
FIGURE 13-3

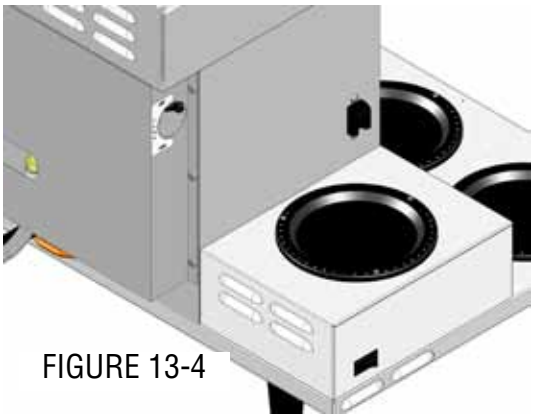
FIGURE 13-4

COFFEE BREWING

1. Insert a BUNN® filter into the funnel.
2. Pour the fresh coffee into the filter and level the bed of grounds by gently shaking.
3. Slide the funnel into the funnel rails.
4. Place an empty dispenser beneath the funnel.
5. Place the "ON/OFF" switch in the "ON" upper position. Momentarily press and release the start switch.
6. When brewing is completed, simply discard the grounds and filter.

HOT WATER FAUCET

The hot water faucet may be used to dispense a cup of hot water at any time. Not intended for filling carafes, pitchers, etc. Attempting to dispense more than 8-10 ounces will result in cool water. **NOTE –** Faucet will not work with the pour in feature, brewer must be plumbed to a working water supply line.

CLEANING

1. The use of a damp cloth rinsed in any mild, non-abrasive, liquid detergent is recommended for cleaning all surfaces on Bunn-O-Matic equipment. *Use care when cleaning around the heater switch with a cloth, so as not to accidentally turn off the tank heater!*
2. Clean out the sprayhead holes. A properly cleaned sprayhead will leave a dimple in the bed of coffee grounds for each hole. Example: 6 holes = 6 dimples. FIG 15-1/2
3. With the sprayhead removed, insert the deliming spring (provided) all the way into the sprayhead tube. When inserted properly, no more than two inches of spring should be visible. Saw back and forth five or six times. FIG 15-3. **NOTE –** In hard water areas, this may need to be done daily. It will help prevent liming problems in the brewer and takes less than a minute.
4. The faucet aerator may be removed for cleaning. Unscrew aerator assembly (counterclockwise from bottom) FIG 15-5

WARNING: DO NOT ATTEMPT TO DISASSEMBLE REMAINDER OF FAUCET ASSEMBLY UNTIL BREWER IS DISCONECTED FROM WATER LINE.

FIG 15-1

Normal pattern

FIG 15-2

Plugged Sprayhead Hole

FIG 15-3

Clean Sprayhead Holes

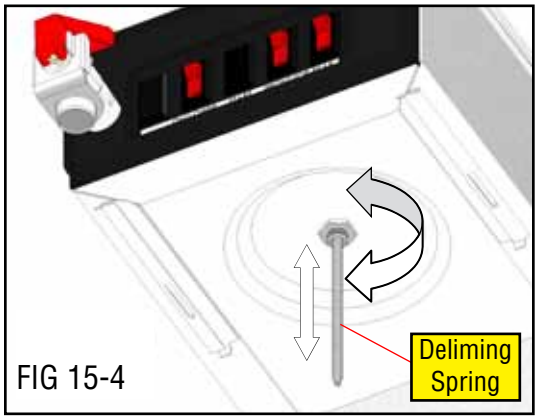

FIG 15-4

Twist deliming spring while pushing in

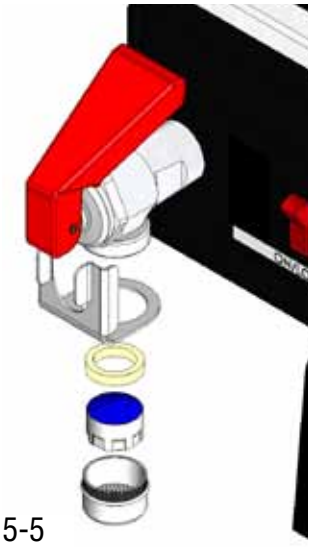

FIG 15-5

Aerator disassembly

TROUBLESHOOTING

A troubleshooting guide is provided to suggest probable causes and remedies for the most likely problems encountered. If the problem remains after exhausting the troubleshooting steps, contact the Bunn-O-Matic Technical Service Department.

- Inspection, testing, and repair of electrical equipment should be performed only by qualified service personnel.
- All electronic components have 120 volt ac and low voltage dc potential on their terminals. Shorting of terminals or the application of external voltages may result in board failure.
- Intermittent operation of electronic circuit boards is unlikely. Board failure will normally be permanent. If an intermittent condition is encountered, the cause will likely be a switch contact or a loose connection at a terminal or crimp.
- Solenoid removal requires interrupting the water supply to the valve. Damage may result if solenoids are energized for more than ten minutes without a supply of water.
- The use of two wrenches is recommended whenever plumbing fittings are tightened or loosened. This will help to avoid twists and kinks in the tubing.
- Make certain that all plumbing connections are sealed and electrical connections tight and isolated.
- This brewer is heated at all times. Keep away from combustibles.

WARNING –
- Exercise extreme caution when servicing electrical equipment.
- Unplug the brewer when servicing, except when electrical tests are specified.
- Follow recommended service procedures
- Replace all protective shields or safety notices

PROBLEM	PROBABLE CAUSE	REMEDY
Brew cycle will not start	1. ON/LOWER Switch is off.	Turn on switch.
	2. No power	(A) Turn on main power switch. (B) Check that the power cord is securely plugged into outlet. (C) Check circuit breakers or fuses.
	3. No water	(A) Water lines and valves to the brewer must be open. (B) Check for plugged water filter
Water is not hot	1. Heater switch turned off.	Turn on switch
Inconsistent beverage level	1. Lime Build-up	(A) Use deliming spring. (B) Clean sprayhead. (Page 11)
	2. Water Pressure fluctuating.	Have a pressure regulator Installed.
Consistently low or high beverage level.	1. Timer adjustment.	Adjust timer (Page 10)

TROUBLESHOOTING (cont.)

PROBLEM	PROBABLE CAUSE	REMEDY
Spitting or excessive steaming	1. Lime Build-up	(A) Use deliming spring. (B) Clean sprayhead. (Page 11)
Dripping from sprayhead	1. Syphon System	The brewer must be level or slightly lower in front to syphon properly.
Brew cycle starts when ON/ LOWER Switch is turned on.	Auxiliary brew start switch on TWINS inadvertently activated.	Move objects away from brewer.
Weak beverage	1. Filter Type	BUNN® paper filters must be used for proper extraction.
	2. Coffee Grind	A fine or drip grind must be used for proper extraction.
	3. Sprayhead	A clean spray-head must be used for proper extraction.
	4. Funnel Loading	The BUNN® paper filter must be centered in the funnel and the bed of ground leveled by gentle shaking.
	5. Water Temperature	Place an empty funnel on an empty dispenser beneath the sprayhead. Initiate a brew cycle and check the water temperature immediately below the sprayhead with a thermometer. The reading should not be less than 195°F (76°C). Adjust the control thermostat to increase the water temperature. Replace if necessary.
Dry coffee grounds remain in the funnel	1. Funnel Loading	The BUNN® paper filter must be centered in the funnel and the bed of grounds leveled by gently shaking.
	2. Sprayhead	A clean spray-head must be used for proper extraction.