BUNN® C, CT, CW, CWTF Series

Including DV, MV, Pourover, APS/TC/TS, Twins & Single CW

Supercedes Illustrated Parts Catalogs:
10716.####; 10789.####; 10790.0000;
10834.0000; 10895.0000; 33175.0000; 35279.0000

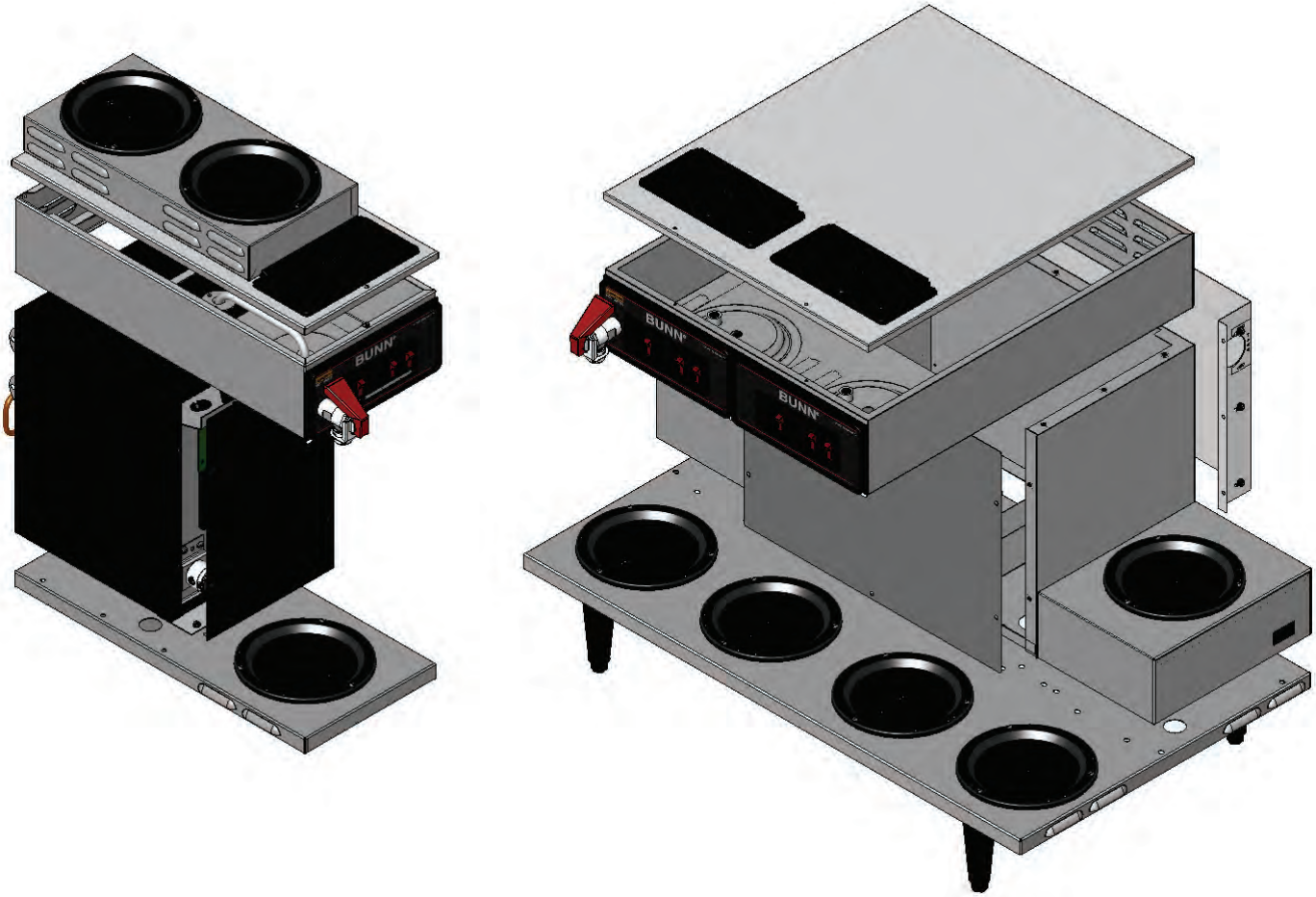

ILLUSTRATED PARTS CATALOG

Designs, materials, weights, specifications, and dimensions for equipment or replacement parts are subject to change without notice.

BUNN-O-MATIC CORPORATION
POST OFFICE BOX 3227
SPRINGFIELD, ILLINOIS 62708-3227
PHONE: (217) 529-6601 FAX: (217) 529-6644

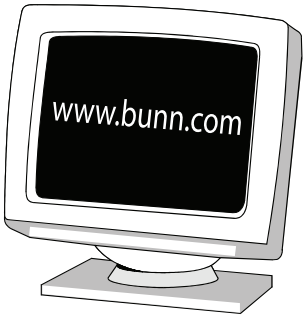

40566.0000L 05/13 ©2006 Bunn-O-Matic Corporation

BUNN-O-MATIC COMMERCIAL PRODUCT WARRANTY

Bunn-O-Matic Corp. ("BUNN") warrants equipment manufactured by it as follows:

1) Airpots, thermal carafes, decanters, GPR servers, iced tea/coffee dispensers, MCP/MCA pod brewers thermal servers and Thermofresh servers (mechanical and digital)- 1 year parts and 1 year labor.

2) All other equipment - 2 years parts and 1 year labor plus added warranties as specified below:

a) Electronic circuit and/or control boards - parts and labor for 3 years.

b) Compressors on refrigeration equipment - 5 years parts and 1 year labor.

c) Grinding burrs on coffee grinding equipment to grind coffee to meet original factory screen sieve analysis - parts and labor for 4 years or 40,000 pounds of coffee, whichever comes first.

These warranty periods run from the date of installation BUNN warrants that the equipment manufactured by it will be commercially free of defects in material and workmanship existing at the time of manufacture and appearing within the applicable warranty period. This warranty does not apply to any equipment, component or part that was not manufactured by BUNN or that, in BUNN's judgment, has been affected by misuse, neglect, alteration, improper installation or operation, improper maintenance or repair, non periodic cleaning and descaling, equipment failures related to poor water quality, damage or casualty. In addition, the warranty does not apply to replacement of items subject to normal use including but not limited to user replaceable parts such as seals and gaskets. This warranty is conditioned on the Buyer 1) giving BUNN prompt notice of any claim to be made under this warranty by telephone at (217) 529-6601 or by writing to Post Office Box 3227, Springfield, Illinois 62708-3227; 2) if requested by BUNN, shipping the defective equipment prepaid to an authorized BUNN service location; and 3) receiving prior authorization from BUNN that the defective equipment is under warranty.

THE FOREGOING WARRANTY IS EXCLUSIVE AND IS IN LIEU OF ANY OTHER WARRANTY, WRITTEN OR ORAL, EXPRESS OR IMPLIED, INCLUDING, BUT NOT LIMITED TO, ANY IMPLIED WARRANTY OF EITHER MERCHANTABILITY OR FITNESS FOR A PARTICULAR PURPOSE. The agents, dealers or employees of BUNN are not authorized to make modifications to this warranty or to make additional warranties that are binding on BUNN. Accordingly, statements by such individuals, whether oral or written, do not constitute warranties and should not be relied upon.

If BUNN determines in its sole discretion that the equipment does not conform to the warranty, BUNN, at its exclusive option while the equipment is under warranty, shall either 1) provide at no charge replacement parts and/or labor (during the applicable parts and labor warranty periods specified above) to repair the defective components, provided that this repair is done by a BUNN Authorized Service Representative; or 2) shall replace the equipment or refund the purchase price for the equipment.

THE BUYER'S REMEDY AGAINST BUNN FOR THE BREACH OF ANY OBLIGATION ARISING OUT OF THE SALE OF THIS EQUIPMENT, WHETHER DERIVED FROM WARRANTY OR OTHERWISE, SHALL BE LIMITED, AT BUNN'S SOLE OPTION AS SPECIFIED HEREIN, TO REPAIR, REPLACEMENT OR REFUND.

In no event shall BUNN be liable for any other damage or loss, including, but not limited to, lost profits, lost sales, loss of use of equipment, claims of Buyer's customers, cost of capital, cost of down time, cost of substitute equipment, facilities or services, or any other special, incidental or consequential damages.

392, A Partner You Can Count On, Air Infusion, AutoPOD, AXIOM, BrewLOGIC, BrewMETER, Brew Better Not Bitter, BrewWISE, BrewWIZARD, BUNN Espress, BUNN Family Gourmet, BUNN Gourmet, BUNN Pour-O-Matic, BUNN, BUNN with the stylized red line, BUNNlink, Bunn-OMatic, Bunn-O-Matic, BUNNserve, BUNNSERVE with the stylized wrench design, Cool Froth, DBC, Dr. Brew stylized Dr. design, Dual, Easy Pour, EasyClear, EasyGard, FlavorGard, Gourmet Ice, Gourmet Juice, High Intensity, iMIX, Infusion Series, Intellisteam, My Café, Phase Brew, PowerLogic, Quality Beverage Equipment Worldwide, Respect Earth, Respect Earth with the stylized leaf and coffee cherry design, Safety-Fresh, savemycoffee.com, Scale-Pro, Silver Series, Single, Smart Funnel, Smart Hopper, SmartWAVE, Soft Heat, SplashGard, The Mark of Quality in Beverage Equipment Worldwide, ThermoFresh, Titan, trifecta, Velocity Brew, Air Brew, Beverage Bar Creator, Beverage Profit Calculator, Brew better, not bitter., BUNNSource, Coffee At Its Best, Cyclonic Heating System, Daypart, Digital Brewer Control, Element, Nothing Brews Like a BUNN, Pouring Profits, Signature Series, Tea At Its Best, The Horizontal Red Line, Ultra are either trademarks or registered trademarks of Bunn-O-Matic Corporation. The commercial trifecta® brewer housing configuration is a trademark of Bunn-O-Matic Corporation.

TABLE OF CONTENTS

TOP COVERS 4
HOOD ASSEMBLIES 8
TRUNKS 10
BASES 16
TANK AND COMPONENTS 20
FILL BASIN 24
MANIFOLDS-LATER TWINS 26
STRAINER/FLOW CONTROLS-EARLY TWINS 28
MANIFOLDS-LATER SINGLES 30
STRAINER/FLOW CONTROLS-SECOND STYLE SINGLES 32
STRAINER/FLOW CONTROLS-FIRST STYLE SINGLES 34
FILL SOLENOIDS 36
FAUCET 38
WARMER ASSEMBLIES 40
ELECTRICAL AND OPERATING CONTROLS 42
FUNNELS 52
NUMERICAL INDEX 54

Explanation of codes:

15 - All components in machine are rated for 120 Volts ac, (15 Amps)
20 - All components in machine are rated for 120 Volts ac, (20 Amps)
35 (120/240V) - Tank heater rated for 240 volts ac, all other components rated for 120 volts ac (20 Amps)
DV - Dual Voltage. 2 tank heaters with toggle switch
MV - Multi Voltage. 2 tank heaters with terminal block. (Replaced by DV)
A - All components in machine are rated for 240 volts ac.
B - All components are rated for either 100 volts ac, or 200 volts ac.
C - Canadian models only
CE - European models only.
TWIN - 2 brewers in 1 chassis.
APS - Airpot Server (No warmers)
TC - Thermal Carafe (No warmers)
TS - Thermal Server (No warmers)

Fraction	Decimal	Fraction	Decimal
1/16	0.063	**9/16**	0.563
1/8	0.125	**5/8**	0.625
3/16	0.188	**11/16**	0.688
1/4	0.250	**3/4**	0.750
5/16	0.313	**13/16**	0.813
3/8	0.375	**7/8**	0.875
7/16	0.438	**15/16**	0.938
1/2	0.500	**1**	1.000

TOP COVER ASSEMBLIES-SINGLES

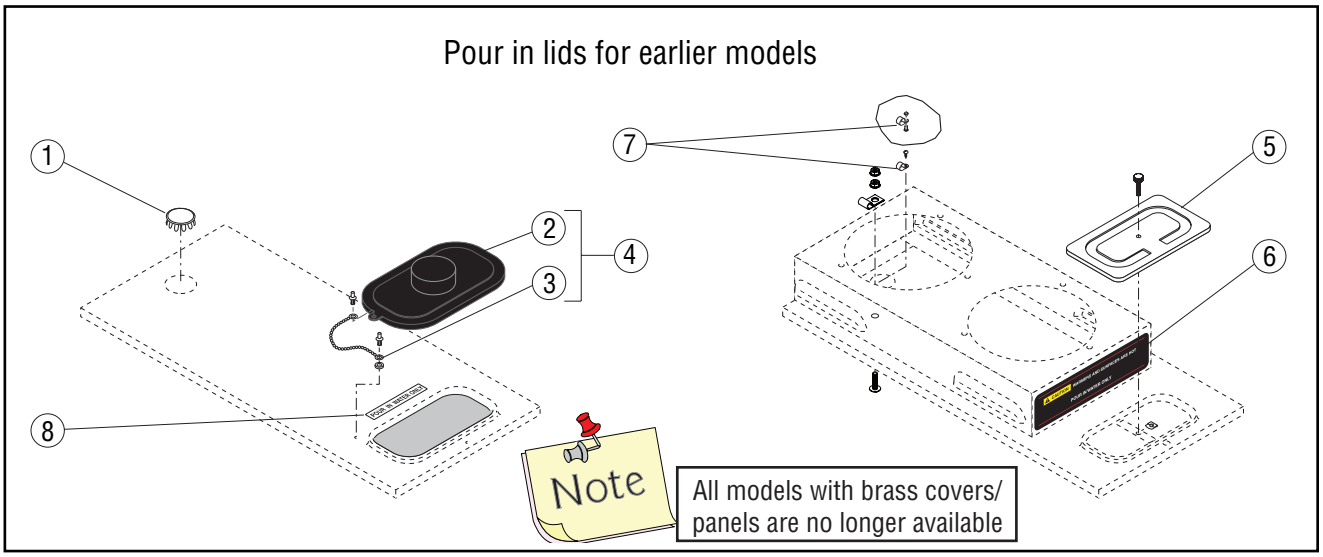

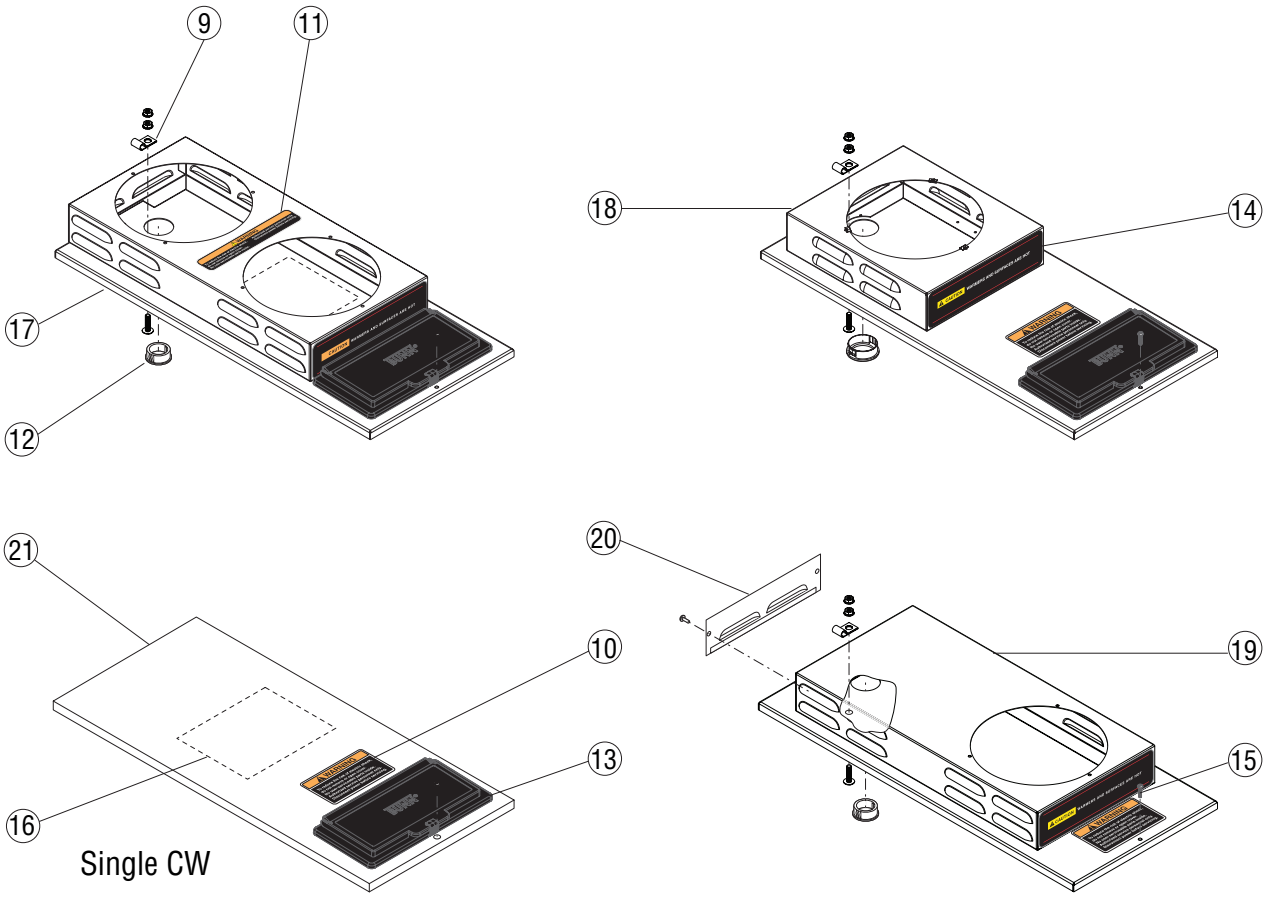

P3908.5

TOP COVER ASSEMBLIES-SINGLES

ITEM	PART NO.	QTY. TWIN	QTY. SINGLE	DESCRIPTION	
1	02999.0000	-	1	Plug, SST 1.19” Dia.	
2	13110.0000	-	1	Lid	
3	12978.0000	-	1	Chain Assembly	
4	12981.0001	-	1	Lid/Chain Kit (Includes # 2-3)	
5	02722.0000	2	1	Lid, Pour-in SST	
	02722.0001	2	1	Lid, Pour-in BLK	
	01319.0000	2	1	SST thumbscrew # 8-32 x .75"	
	01319.0000	2	1	BLK thumbscrew # 8-32 x .75"	
	00912.0000	2	1	Fastener, “J” Type # 8-32	
6	02763.0000	-	1	Decal, Caution-Warmers and Surfaces are Hot - Pour in Water Only	
7	04831.0000	1	1	Clamp	
	01315.0000	1	1	Screw, Truss Head #8-32 x .375"	First Style
	00908.0000	1	1	Nut #8-32	First Style
	02332.0002	1	1	Screw, Hex-crimptite #6-32 X .375”	Second Style
8	00833.0000	-	1	Decal, Pour in Water Only	
9	41760.0000	2	1	Clip, Cable - SST	Later Models
	01326.0007	2	1	Screw, TRH SLTD 10-32x.75LG	Later Models
	00971.0000	4	2	Nut, Keps #10-32 Zinc Pl	Later Models
10	37881.0000	1	1	Decal, No User Serviceable Parts	
11	37881.0002	-	1	Decal, No User Serviceable Parts	
12	01592.0000	2	1	Bushing, Snap 1" Dia.	
	01592.0001	1	1	Bushing, Snap 1.188" Dia.	
13	38498.1000	2	1	Flip Lid Assembly w/Clip	
14	02765.0000	1	-	Decal, Caution-Warmers are Hot	
15	01303.0000	2	1	Screw, SST Panhead #4-40 x .5"	
	01303.0002	2	1	Screw, BLK Panhead #4-40 x .5"	
	00916.0000	2	1	Fastener, “J” Type # 4-40	
16	28180.0000	-	1	Decal, Multi Volt Heater Terminal Block Wiring Diagram	
17	38496.1002	-	1	Top Cover Assy. 2 Warmer SST (Includes # 11-14)	
	40085.1000*	-	1	Top Cover Assy. 2 Warmer BLK (OBS)	
18	38496.1000	-	1	Top Cover Assy. 1 Warmer Rear SST (Includes # 11-14)	
19	25633.0002	-	1	Top Cover Assy. 1 Warmer Front SST (Includes # 10, 12, 14)	
20	02732.0000	-	1	Panel, Rear SST	
	01315.0000	-	1	Screw, Truss Head #8-32 x .375"	
21	38503.1000	-	1	Top Cover Assy. No Warmer SST (Includes # 10, 13)	
	38504.1000	-	1	Top Cover Assy. No Warmer BLK (Includes # 10, 13)	

* Indicates the part number listed is for reference only.

TOP COVER ASSEMBLIES-TWINS

All covers/housings include flip lids &/or decals as required.

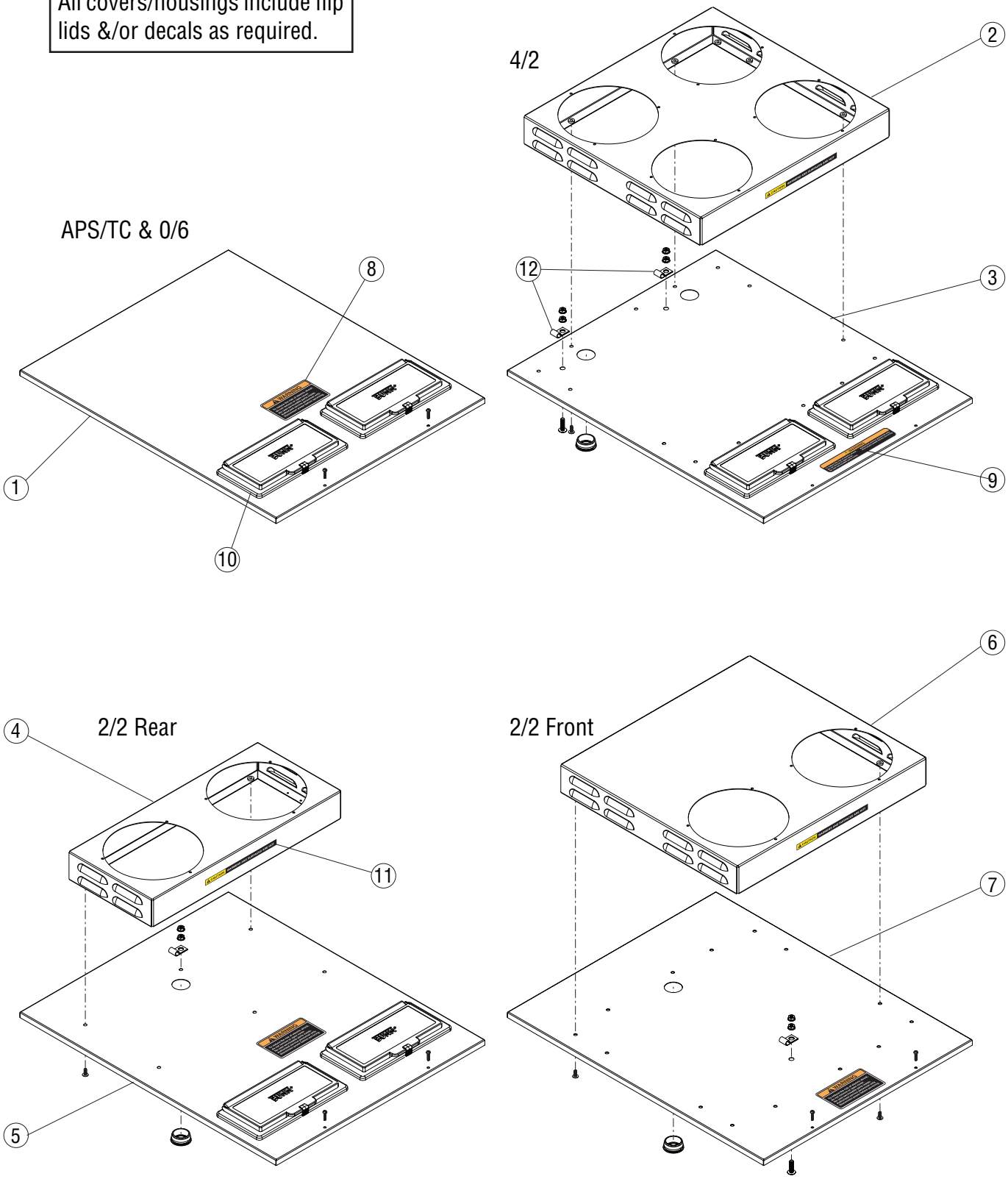

P3909.5

TOP COVER ASSEMBLIES-TWINS

ITEM	PART NO.	QTY. TWIN	QTY. SINGLE	DESCRIPTION
1	38707.1000	1	-	Cover Assembly SST No Warmers (Incl # 8, 10)
	38707.1003	1	-	Cover Assembly BLK No Warmers (Incl # 8, 10)
2	24254.0001	1	-	Housing Assembly, SST 4/2 (Incl # 11)
	01347.0000	10		Screw, Truss Head #6-32 x .375"
3	38707.1001	1	-	Cover Assembly SST 4/2 (Incl # 9, 10)
4	24254.0000	1	-	Housing Assembly, SST 2/2 Rear (Incl # 11)
	01347.0000	6	-	Screw, Truss Head #6-32 x .375"
5	38707.1002	1	-	Cover Assembly SST 2/2 Rear (Incl # 8, 10)
6	24254.0002	1	-	Housing Assembly, SST 2/2 Front (Incl # 11)
	01347.0000	10	-	Screw, Truss Head #6-32 x .375"
7	25864.0000	1	-	Cover Assembly SST 2/2 Front (Incl # 8)
8	37881.0000	1	1	Decal, No User Serviceable Parts
9	37881.0002	1	1	Decal, No User Serviceable Parts
10	38498.1000	2	1	Flip Lid Assembly w/Clip
11	12364.0000	1	-	Decal, Caution-Warmers Are Hot
12	41760.0000	2	1	Clip, Cable - SST
	01326.0007	2	1	Screw, TRH SLTD 10-32x.75LG
	00971.0000	4	2	Nut, Keps #10-32 Zinc Pl

* Indicates the part number listed is for reference only.

HOOD ASSEMBLIES

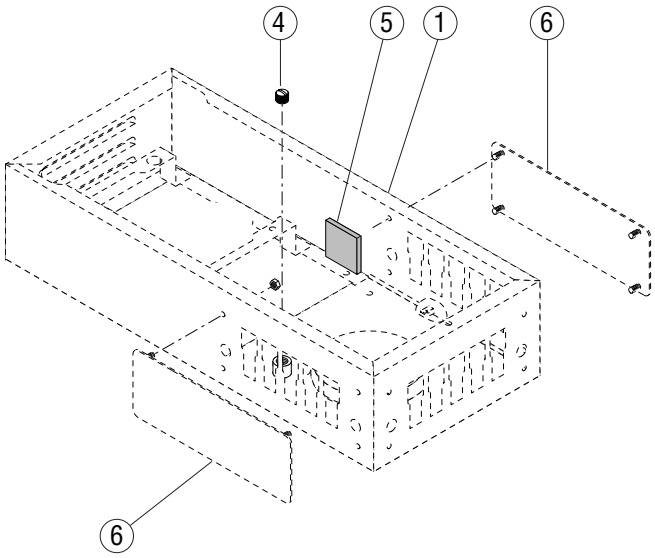

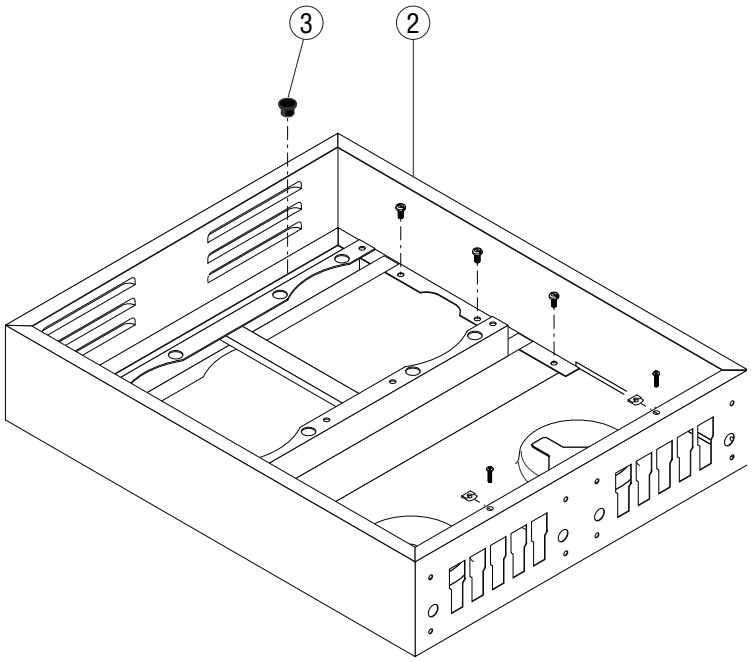

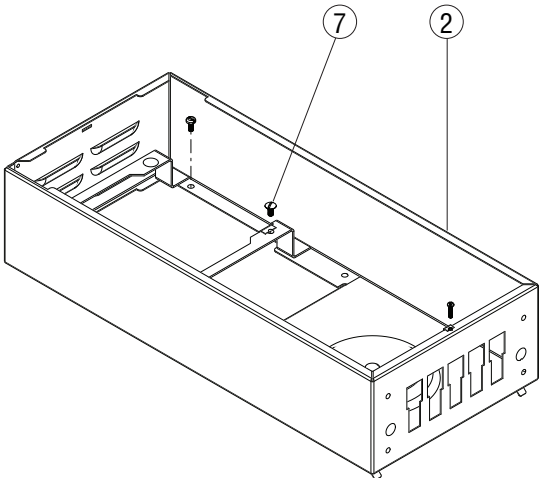

P3910.5

HOOD ASSEMBLIES

ITEM	PART NO.	QTY. TWIN	QTY. SINGLE	DESCRIPTION
1	13350.0008*	-	1	Housing, Hood SST (Early Style No Longer Available, Order # 2)
	02308.0000	-	6	Screw #8-32 x .375" (Hood to Trunk)
2	13350.0006	-	1	Housing, Hood SST (7.125" Narrow Funnel) CWTF, Single CW
	13350.0016	-	1	Housing, Hood BLK (7.125" Narrow Funnel)
	13350.0011	-	1	Housing, Hood SST (7.625" Wide Funnel)
	23232.0000 *	1	-	Housing, Hood SST (7.125" Narrow Funnel)
	23232.0002 *	1	-	Housing, Hood BLK (7.125" Narrow Funnel)
	23232.0004	1	-	Housing, Hood BLK (7.625" Wide Funnel)
	23232.0005	1	-	Housing, Hood SST (7.625" Wide Funnel)
	02308.0000	6	6	Screw #8-32 x .375" PNHD (Hood to Trunk)
	01303.0000	2	1	Screw #4-40 x .50" PNHD (Cover to Hood)
	00916.0000	2	1	Clip J-Type #4-40
3	00669.0003	1	-	Plug BLK Nylon .438" Dia. (Brewers w/o Faucet)
4	00462.0001	-	1	Plug, Slotted Head .125" NPT (Early Models w/Vent Tube)
5	03263.0002	-	1	Sponge Pad w/Adhesive (First Type w/Top Mount Thermostat)
6	12683.0000*	-	2	Cover, Blank (No Longer Available)
	12683.0002*	-	1	Cover, w/Faucet Hole (No Longer Available)
	02371.0000*	-	8	Nut, Thumb #6-32 (No Longer Available)
	00973.0000	-	8	Nut, Keps #6-32 (Later Models)
7	01315.0000	4	2	Screw #8-32 x .375" TRSHD (Tank Mount)
	00912.0000	4	2	Clip, J-Type #8-32

* Indicates the part number listed is for reference only.

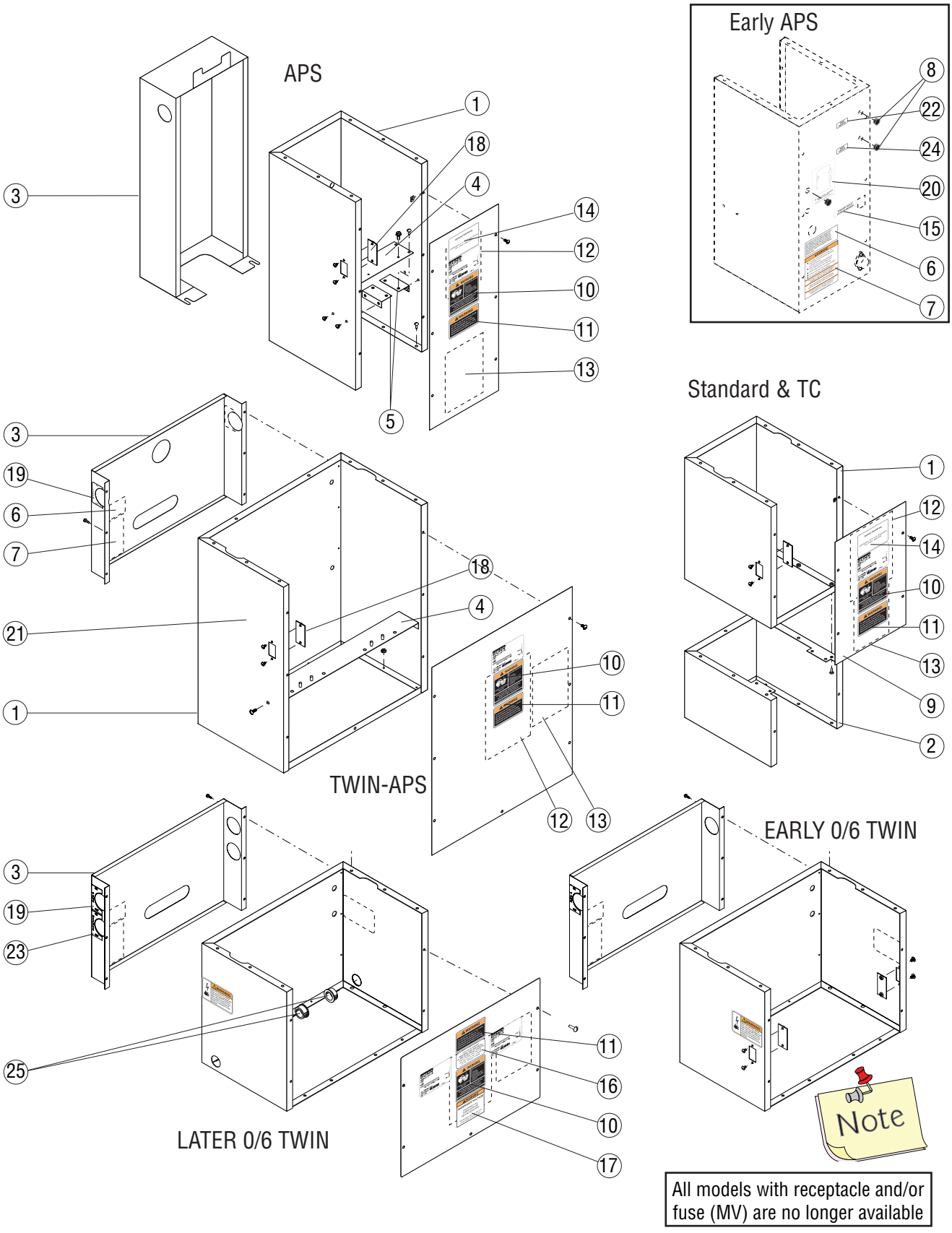
APS
Early APS
Standard & TC
TWIN-APS
EARLY 0/6 TWIN
LATER 0/6 TWIN
Note
All models with receptacle and/or fuse (MV) are no longer available

P3911.30

TRUNKS

ITEM	PART NO.	QTY. TWIN	QTY. SINGLE	DESCRIPTION
1	34061.1006	-	1	Trunk, SST, 11.69" Standard
	34061.1000	-	1	Trunk, BLK, 11.69" Standard
	25352.0007	-	1	Trunk, SST, 12.39" TC
	34208.1002	-	1	Trunk, SST, 18.15" APS
	23320.1004	-	1	Trunk, BLK, 18.15" APS
	34061.0013	-	1	Trunk, BLK, 22.16" TS
	34061.1004	-	1	Trunk, SST, 22.16" TS
	26285.0000	1	-	Trunk, SST, TWIN APS
	26285.0001	1	-	Trunk, BLK, TWIN APS
	26285.0002	1	-	Trunk, SST, TWIN TC
	23294.0000	1	-	Trunk, SST, 0/6, 4/2, 2/2 TWINS w/1 Power Cord
	23294.0002	1	-	Trunk, BLK, 0/6, 4/2, 2/2 TWINS w/1 Power Cord
	23294.0001	1	-	Trunk, SST, 0/6 TWINS ***(w/2 Power Cords Only)***
	34061.1022	-	1	Trunk, SST, 11.69" Standard (Left Mounted Switch)
	34061.1035	-	1	Trunk, SST, 11.69" Standard (Right Mounted Switch)
	34061.1023	-	1	Trunk, BLK, 11.69" Standard
	34061.1025	-	1	Trunk, SST, 12.39" TC
	34061.1003	-	1	Trunk, SST, 16.69" Single CW
	34208.1011	-	1	Trunk, SST, 18.15" APS
	23320.1012	-	1	Trunk, BLK, 18.15" APS
	34061.0026	-	1	Trunk, BLK, 22.16" TS
	26285.0006	1	-	Trunk, SST, TWIN APS
	26285.0008	1	-	Trunk, BLK, TWIN APS
	26285.0007	1	-	Trunk, SST, TWIN TC
	23294.0011	1	-	Trunk, SST, 0/6, 4/2, 2/2 TWINS w/1 Power Cord
	23294.0008	1	-	Trunk, SST, 0/6 TWINS ***(w/2 Power Cords) (2 Switches)***
	23294.1015	1	-	Trunk, SST, 0/6 TWINS ***(w/1 Power Cord Only) (New Style w/Bushings)***
	41402.1000	-	1	Trunk, SST, 11.69" Standard
	41402.1001	-	1	Trunk, BLK, 11.69" Standard
	41402.1003	-	1	Trunk, SST, 12.39" TC
	41402.1008	-	1	Trunk, SST, 16.69" Single CW
	41417.1000	-	1	Trunk, SST, 18.15" APS (120V)
	41417.1001	-	1	Trunk, SST, 18.15" APS (230V CE)
	41417.1002	-	1	Trunk, BLK, 18.15" APS (Domestic)
	23294.1010	1	-	Trunk, SST, 0/6 TWINS (Includes # 21) ***(w/2 Cords) (4 Switches)***
	02308.0000	12	9	Screw, PNHD #8-32 x .375" (Trunk to Base)
	00970.0000	8	-	Nut, Keps #8-32 (Trunk to Base) (TWIN - APS Only)
	00988.0000	7	6	Fastener, (Tinnerman) "U" Type #6-32
2	22748.0000	-	1	Extension, SST, 6.5"
	22748.0001	-	1	Extension, SST, 10.5"
	22748.0002	-	1	Extension, BLK, 10.5"
3	28233.0000	-	1	Optional Utility Cover (Fits 18.15" APS Trunks Only)
	23270.0000	1	-	Utility Cover w/Decals (All Short Twins) (Includes # 6,7,19)
	41426.1000	1	-	Utility Cover w/Decals (0/6 Twins w/ 2 cords) (Includes # 6,7,19, 23)
	02332.0002	6	-	Screw, Hex-Crimptite #6 x .38"
4	26287.0000	1	-	Bracket, Support (APS Only)
	22733.0000	-	1	Bracket, Support (APS Only)
	02308.0000	2	4	Screw #8-32 x .375"

Note

All trunks include decals 00656.0000 & 00831.0000 except 0/6 w/ 2 cords.

No Master ON/OFF Switch

With Side Mounted Rocker Type Master ON/OFF Switch

With Rear Mounted Master ON/OFF Toggle Switch

Continued on next page

* Indicates the part number listed is for reference only.

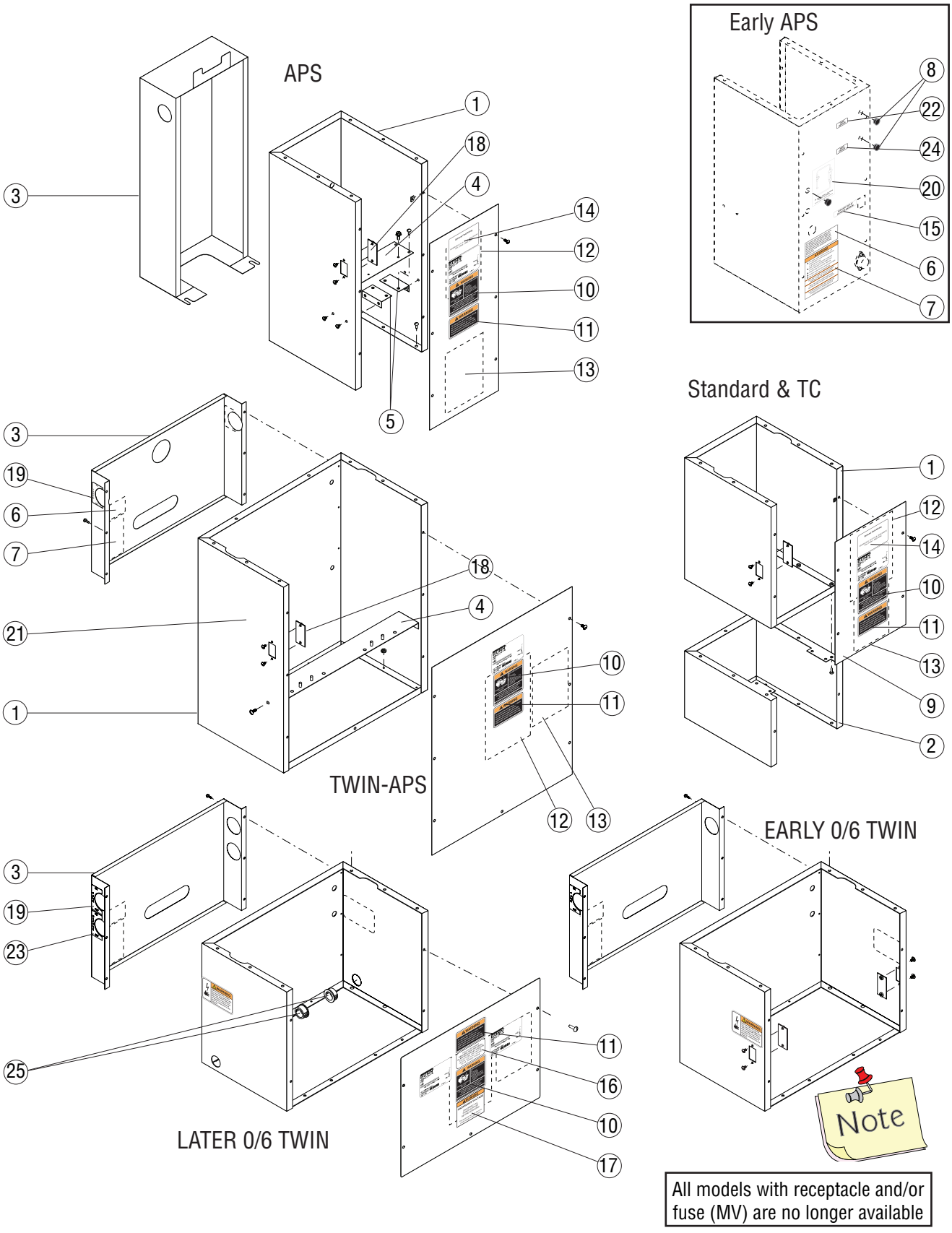
APS
Early APS
Standard & TC
TWIN-APS
EARLY 0/6 TWIN
LATER 0/6 TWIN
Note
All models with receptacle and/or fuse (MV) are no longer available

P3911.30

TRUNKS

ITEM	PART NO.	QTY. TWIN	QTY. SINGLE	DESCRIPTION
5	27929.0000	-	2	Bracket, (APS Only)
	02308.0000	-	4	Screw #8-32 x .375"
6	00656.0001	1	1	Decal, Compliance To Plumbing Code
7	00831.0000	1	1	Decal, Warning-Electrical
8	00669.0003	-	2	Plug
9	11408.1002	-	1	Panel, SST, 11.625" Standard (Includes # 10-11)
	11408.1005	-	1	Panel, BLK, 11.625" Standard (Includes # 10-11)
	11408.1006	-	1	Panel, SST, 12.375" TC (Includes # 10-11)
	22730.1007	-	1	Panel, SST, 15.63" Single CW (Includes # 10-11)
	22730.1002	-	1	Panel, SST, 18.125" APS (Includes # 10-11)
	22730.1005	-	1	Panel, BLK, 18.125" APS (Includes # 10-11)
	22730.1003	-	1	Panel, SST, 22.125" TS (Includes # 10-11)
	22730.1009	-	1	Panel, BLK, 22.125" TS (Includes # 10-11)
	01382.0000	-	4-6	Screw, SST #6-32 x .375"
	01382.0002	-	4-6	Screw, BLK #6-32 x .375"
	26283.1000	1	-	Panel, SST, TWIN APS (Includes # 10-11)
	26283.1001	1	-	Panel, BLK, TWIN APS (Includes # 10-11)
	23267.1000	1	-	Panel, SST, All Other TWINS w/One Power Cord (Includes # 10-11)
	24249.0003	1	-	Panel, SST, All 0/6 TWINS w/Two Power Cords (Includes # 10-12,16,17)
	23267.1001	1	-	Panel, BLK, All Other TWINS (Includes # 10-11)
	01315.0000	5-7	-	Screw, SST #8-32 x .375"
	01315.0005	5-7	-	Screw, BLK #8-32 x .375"
10	00658.0000	1	1	Decal, Warning-Decanter/Funnel
11	37881.0000	1	1	Decal, No User Serviceable Parts
12	10836.0000	-	1	Schematic, C, CWT, CWTF-15, 20, 35, 120V, 120/208-240V
	10836.0005	-	1	Schematic, C, CWT, CWTF-MV
	10836.0009	-	1	Schematic, C, CWT, CWTF-DV
	10836.0010	-	1	Schematic, APS/TC/TS-DV
	10836.0011	-	1	Schematic, Single CW
	10693.0000	-	1	Schematic, APS/TC/TS-12, 20, 35 (Mechanical T'Stat)
	10693.0001	-	1	Schematic, APS/TC/TS-12, 20, 35 (Electronic T'Stat)
	10693.0002	-	1	Schematic, APS/TC/TS-MV
	10867.0000	1	-	Schematic, 2/2,4/2 Twins w/Optional Recovery Booster
	27693.0000	1	-	Schematic, 0/6 Twins (Mechanical T'Stat, Fresh Timer & Booster)
	10847.0000	1	-	Schematic, 0/6 Twins w/Two Power Cords
	10736.0000	1	-	Schematic, All Other Twins
13	32540.0000	1	1	Decal, Digital Timer Setting
14	28181.0000	-	1	Decal, Optional Field Wiring (3 Warmer) (MV Only)
	28181.0001	-	1	Decal, Optional Field Wiring (1 Warmer) (MV Only)
	28181.0002	-	1	Decal, Optional Field Wiring (APS-MV Only)
	34955.0000	-	1	Decal, Optional Field Wiring (TC/APS-DV Only)
	34955.0001	-	1	Decal, Optional Field Wiring (1 Warmer) (DV Only)
	34955.0002	-	1	Decal, Optional Field Wiring (2 Warmer) (DV Only)
	34955.0003	-	1	Decal, Optional Field Wiring (3 Warmer) (DV Only)
15	02822.0000	-	1	Decal, 200 Watts Maximum
16	12183.0002	1	-	Decal, 20 amp Electrical Circuit ***(Brewers with two Power Cords Only)***

(1st type) separate Strainer & Flow Control

All front panels include decals 00658.0000 & 37881.0000

Continued on next page

* Indicates the part number listed is for reference only.

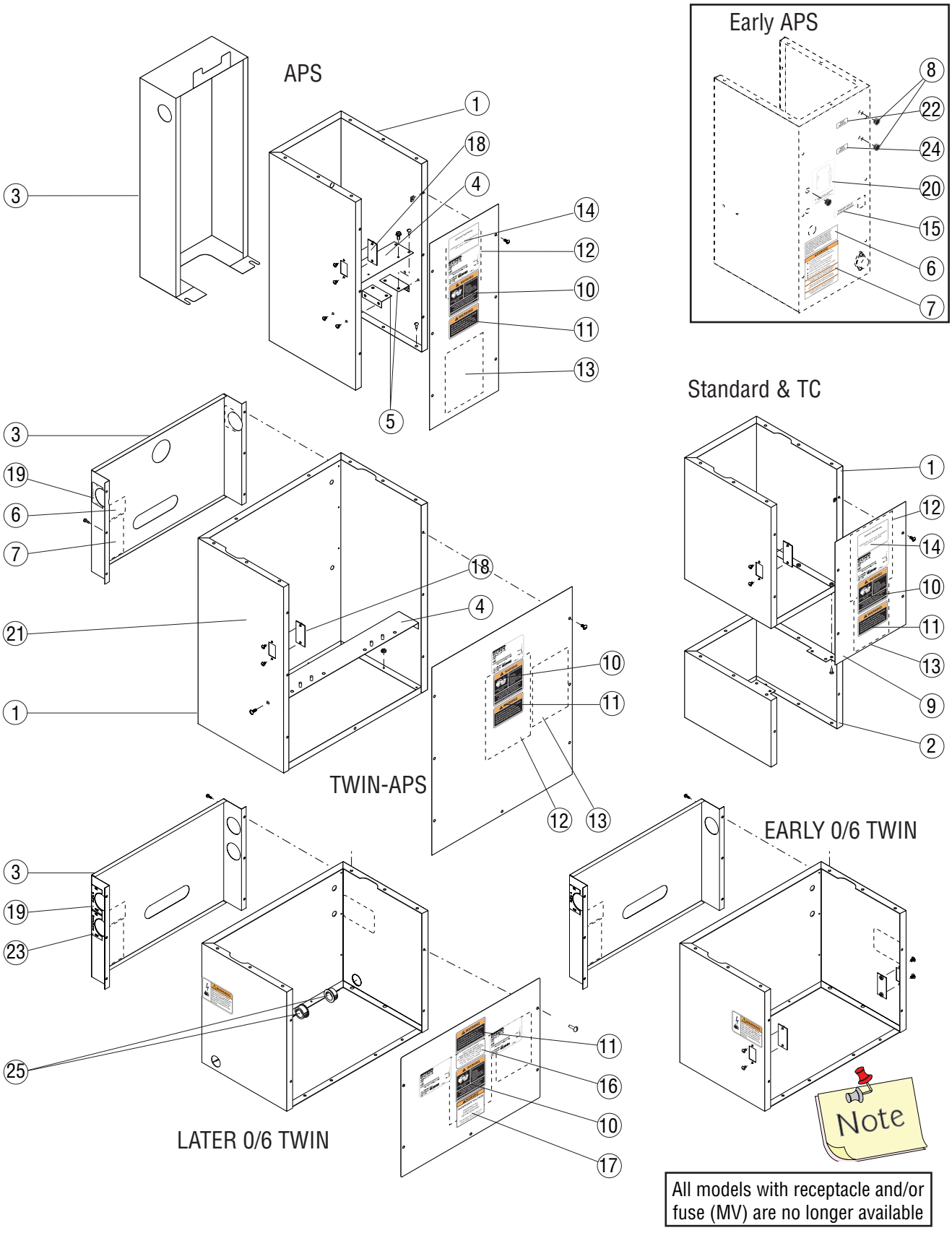
APS
Early APS
Standard & TC
TWIN-APS
EARLY 0/6 TWIN
LATER 0/6 TWIN
Note
All models with receptacle and/or fuse (MV) are no longer available

P3911.30

TRUNKS

ITEM	PART NO.	QTY. TWIN	QTY. SINGLE	DESCRIPTION
17	12104.0000	1	-	Decal, Warning-Power Supply ***(Brewers with two Power Cords Only)***
18	38820.0000	1	1	Plate, Switch Cover ***(Models w/out Power Switch)***
	01308.0002	2	2	Screw SST #6-32 x .25"
	01308.0003	2	2	Screw BLK #6-32 x .25"
19	24213.0000	1	-	Decal, Tank Heater (Includes Left & Right Decals)
20	10165.0000	-	1	Decal, Strainer/Flow Control (w/o Needle Valve
	10447.0000	-	1	Decal, Strainer/Flow Control (w/Needle Valve)
	24540.0000	-	1	Decal, Strainer/Flow Control 2nd Type (Center Tap & Needle Valve)
	26225.0000	-	1	Decal, Strainer/Flow Control 3rd type (One Piece Strainer/Flow Control)
21	40124.0000	(2)	-	Decal, Warning-ON/OFF Switch x 2 ***(0/6 Twins with two Power Cords Only)***
22	39806.0000	-	1	Decal, Tank Heater
23	41427.0000	2	-	Decal, Master ON/OFF (Includes Left & Right Decals)
24	41405.0000	-	1	Decal, Master ON/OFF
25	01592.0000	2	-	Bushing

* Indicates the part number listed is for reference only.

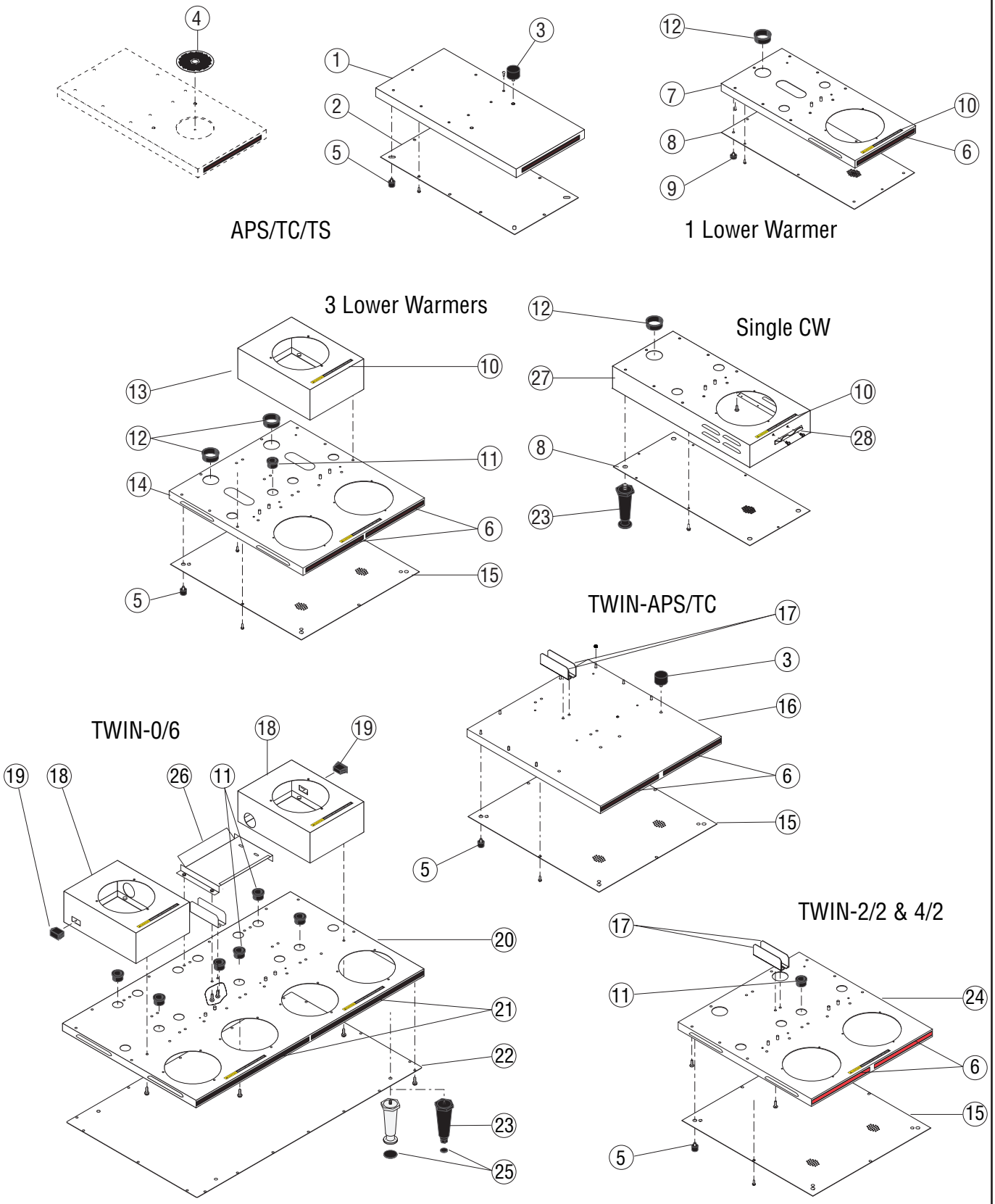
APS/TC/TS
1 Lower Warmer
3 Lower Warmers
Single CW
TWIN-APS/TC
TWIN-0/6
TWIN-2/2 & 4/2
P3912.25

BASES

ITEM	PART NO.	QTY. TWIN	QTY. SINGLE	DESCRIPTION
1	23321.0000	-	1	Base W/decals, Sst (Includes Item 6) Aps
	23321.0001	-	1	Base W/decals, Sst (Includes Item 6) Ts
	23321.0002	-	1	Base W/decals, Sst (Includes Item 6) Aps (Ce)
	23321.0003	-	1	Base W/decals, Sst (Includes Item 6) Ts (Ce)
	23321.0004	-	1	Base W/decals, Blk (Includes Item 6) Aps
2	22999.0000	-	1	Plate, Base APS/TC/TS
	02332.0002	-	8	Screw, Hex-crimptite #6-32 X .375”
3	00754.0001	4	2	Locator
4	22740.0000	-	1	Drip Shield, (Early Models Only)
5	25137.0001	-	4	Foot .75od X .48ht X .25thd
	24600.0000	-	-	Set Of 4 Feet
6	22306.0000	2	1	Decal, Red Decorative Stripe
7	25351.0000	-	1	Base, 1 Warmer W/decals, Sst (Includes Items 6 & 10)
	25351.0001	-	1	Base, 1 Warmer W/decals, Sst (Includes Items 6 & 10) (Ce)
	25351.0002*	-	1	Base, 1 Warmer W/decals, Blk (Includes Items 6 & 10)
8	24805.0000	-	1	Plate, Base 1 Warmer
	24805.0002	-	1	Plate, Base 1 Warmer (Single CW)
	02332.0002	-	6	Screw, Hex-crimptite #6-32 X .375”
9	25137.0000	-	4	Foot .75od X .25ht X .25thd
	35712.0000	-	-	Set Of 4 Feet
10	12364.0000	#	#	Decal, Caution-warmers/surfaces Are Hot (Refer To Illustration For Qty.)
11	01592.0000	#	#	Bushing, Snap 1” (Refer To Illustration For Qty.)
12	01593.0000	#	#	Bushing, Snap 1.5” (Refer To Illustration For Qty.)
13	25658.0000	-	1	Housing, Side Warmer Sst (Includes Item 10)
	25658.0002	-	1	Housing, Side Warmer Blk (Includes Item 10)
	02308.0000	-	7	Screw, #8-32 X .375”
14	25657.0000	-	1	Base, 3 Warmers W/decals, Sst (Includes Items 6 & 10)
	25657.0001	-	1	Base, 3 Warmers W/decals, Sst (Includes Items 6 & 10) Ce
	25657.0002	-	1	Base, 3 Warmers W/decals, Blk (Includes Items 6 & 10)
15	12667.0001	-	1	Plate, Base 3 Warmers
16	26413.0000	1	-	Base W/decals, Sst (Includes Item 6) Twin-aps
	26413.0001	1	-	Base W/decals, Blk (Includes Item 6) Twin-aps
17	26953.0000	2	-	Guard, Wiring
	02308.0000	4	-	Screw, #8-32 X .375”
18	23698.1002	1	-	Housing, Side Warmer Sst Left (Includes Item 10) w/o Switch Cut Out
	23698.1003	1	-	Housing, Side Warmer Sst Right (Includes Item 10) w/o Switch Cut Out
	23698.1004	1	-	Housing, Side Warmer Sst Right (Includes Item 10) w/Switch Cut Out
	23698.1005	1	-	Housing, Side Warmer Sst Left (Includes Item 10) w/Switch Cut Out
	02308.0000	14	-	Screw, #8-32 X .375”
19	12921.0000	2	-	Switch Blank

Continued on next page

* Indicates the part number listed is for reference only.

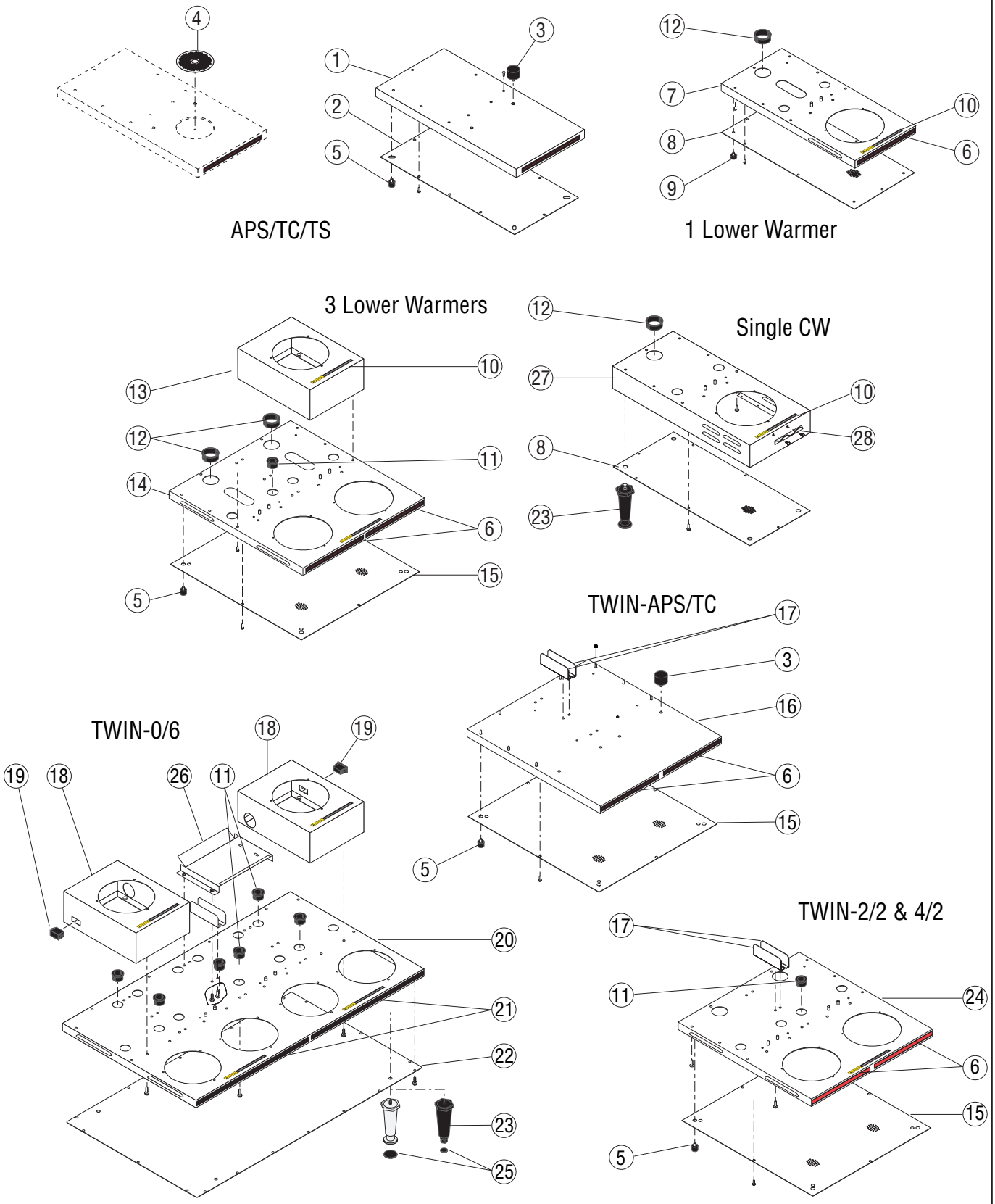
APS/TC/TS
1 Lower Warmer
3 Lower Warmers
Single CW
TWIN-APS/TC
TWIN-0/6
TWIN-2/2 & 4/2
P3912.25

BASES

ITEM	PART NO.	QTY. TWIN	QTY. SINGLE	DESCRIPTION
20	24253.0001	1	-	Base W/decals, Sst (Includes # 10 & 21) Twin 0/6
	24253.0002	1	-	Base W/decals, Blk (Includes # 10 & 21) Twin 0/6
	02308.0000	12	-	Screw, #8-32 X .375”
21	24230.0000	2	1	Decal, Red Decorative Stripe
22	23329.0000	1	-	Plate, Base, Twin 0/6
	02332.0002	18	-	Screw, Hex-crimptite #6-32 X .375”
23	00511.1000	1 Set	-	Legs, 4” Adjustable, Satin Nickel, .25”-20 (Includes # 25)
	13255.0005	1 Set	-	Legs, 4” Adjustable, Black Plastic, .25”-20 (Includes # 25)
	26528.0001	-	4	Legs, 4” Adjustable, Black Plastic, .25”-20 (Single CW)
24	24253.0000	1	-	Base W/decals, Sst (Includes Items 6 & 10) Twin 2/2 & 4/2
	24253.0003	1	-	Base W/decals, Blk (Includes Items 6 & 10) Twin 2/2 & 4/2
	02308.0000	12	-	Screw, #8-32 X .375”
25	03996.0000	4	-	Pad, 1.25”
	03993.0000	4	-	Pad, .70”
26	27623.0000	1	-	Guard, Wiring - Right ***(Brewers with two Power Cords Only)***
	02308.0000	2	-	Screw, #8-32 X .375”
27	34065.1001	-	1	Base W/decals, Sst (Includes # 10 & 28) Single CW
28	21104.0003	-	1	Server Stop (Single CW Only)
	01347.0000	-	2	Screw, Truss Head #6-32 x .375”

* Indicates the part number listed is for reference only.

TANK AND COMPONENTS

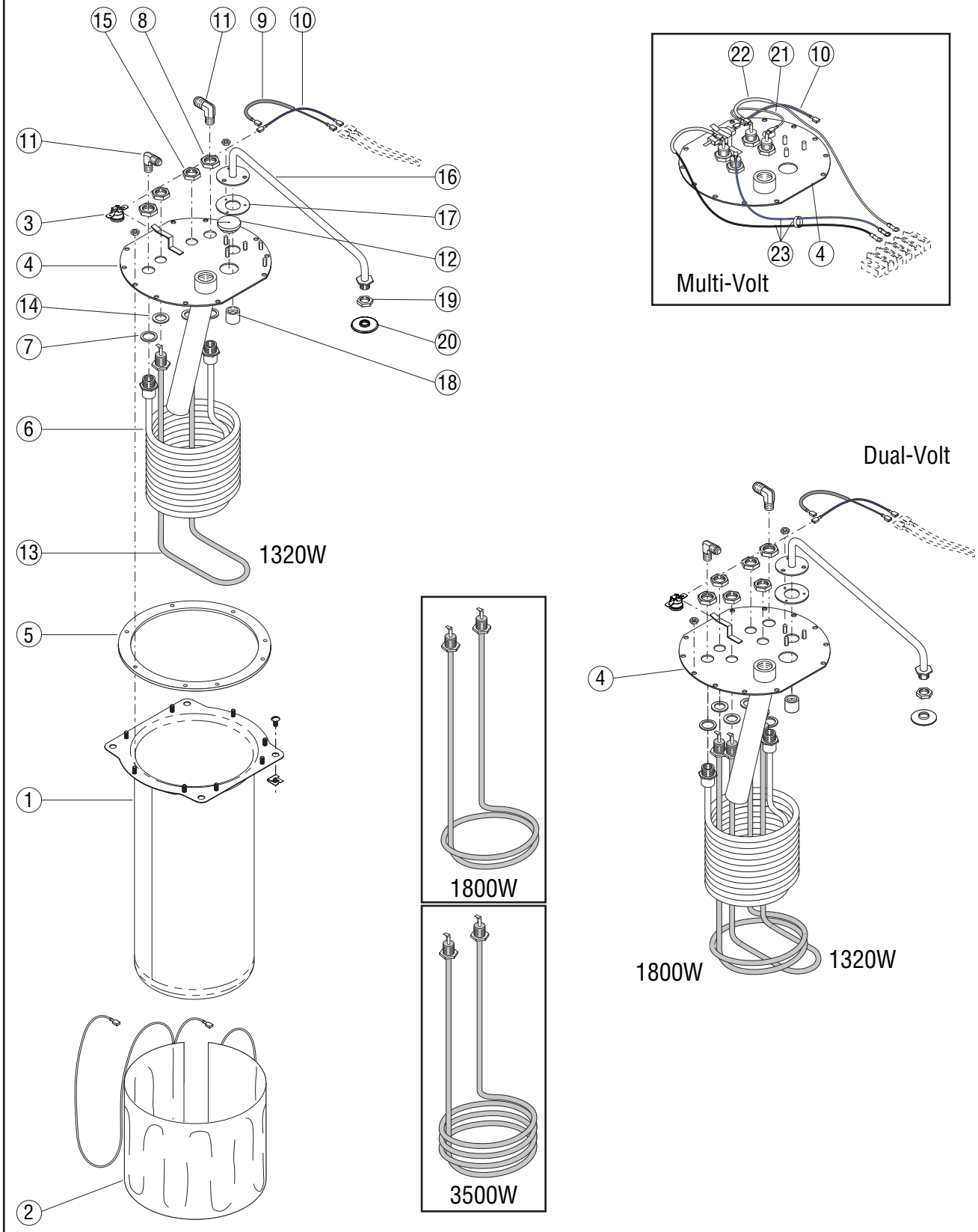

P3913.5

TANK AND COMPONENTS

ITEM	PART NO.	QTY. TWIN	QTY. SINGLE	DESCRIPTION
1	04118.0000	2	1	Tank
	20201.3000	-	1	Tank (Single CW)
	01315.0000	4	2	Screw #8-32 x .375˝ TRSHD
	00912.0000	4	2	Clip, J-Type #8-32
2	04260.0000	2	1	Blanket Warmer 50W, 120V
	01927.0000	2	1	Blanket Warmer 50W, 220V
3	29329.1000	2	1	Thermostat, Limit
4	25158.0000	1	1	Tank Lid (1 HTR, No Faucet) (Twin Right)
	25158.0001	1	1	Tank Lid (1 HTR, w/Faucet) (Twin Left) (Single CW)
	25158.0002	-	1	Tank Lid (1 HTR, No Faucet) (Single CW)
	25158.0004	-	1	Tank Lid (DV/MV, w/Faucet)
	00908.0000	16	8	Nut, Hex #8-32
5	04221.0000	2	1	Gasket, Tank Lid
6	12689.1000	1	1	Coil Assy, Faucet (Includes # 7)
7	12688.0000	2	2	Gasket, Water Coil
8	12687.0000	2	2	Nut, Hex Brass .562˝-24 (Water Coil)
9	20211.0100	1	1	Thermal Cut Off (TCO) (Thermostat to Heater) w/Faucet
	23769.0000	1	1	Lead, Electrical BLK (Thermostat to Heater) w/o Faucet
10	23768.0000	2	1	Lead, Electrical BLU (Thermostat to Limit)
11	00400.0001	4	2	Elbow, Male .250˝ Flare x .125˝ MPT
12	----------	-	-	(See Electrical Section)
13	03070.1001	-	1	Tank Heater, 1500W 120V (Single CW-15)
	04236.1000	-	1	Tank Heater, 1320W 120V (CWTF-15 & MV/DV)
	04636.1000	-	1	Tank Heater, 1800W 120V (CWTF-20 & MV/DV)
	01925.1000	-	1	Tank Heater, 1850W 220V (CWTFA-20)
	04637.1000	2	1	Tank Heater, 3500W 240V (CWTF-35 & Twins) — Includes # 14
	20201.0750	-	1	Tank Heater, 3500W 240V (Single CW-35)
	20941.1000	-	1	Tank Heater, 3500W 200V (CWTFB-35)
	23929.1000	2	-	Tank Heater, 1600W 200V (CWTFB-2/2 Twin)
	24217.1000	2	-	Tank Heater, 1800W 230V (CWTFA-2/2 Twin)
	23930.1000	2	-	Tank Heater, 3000W 240V (Twins-CE)
14	00943.0000	4	2	Gasket, Tank Heater
15	00942.0000	4	2	Nut, Brass .5"-20 (Tank Heater)
16	11431.0002	2	1	Sprayhead Tube Kit (Includes 3 mounting nuts below & # 17 & 18)
	00908.0000	6	3	Nut, Hex #8-32
17	05515.0000	2	1	Gasket, Sprayhead tube
18	05518.0000	2	1	Hub, Syphon
19	01075.0000	2	1	Nut, Hex .438”-20, Sprayhead tube

Continued on next page

* Indicates the part number listed is for reference only.

TANK AND COMPONENTS

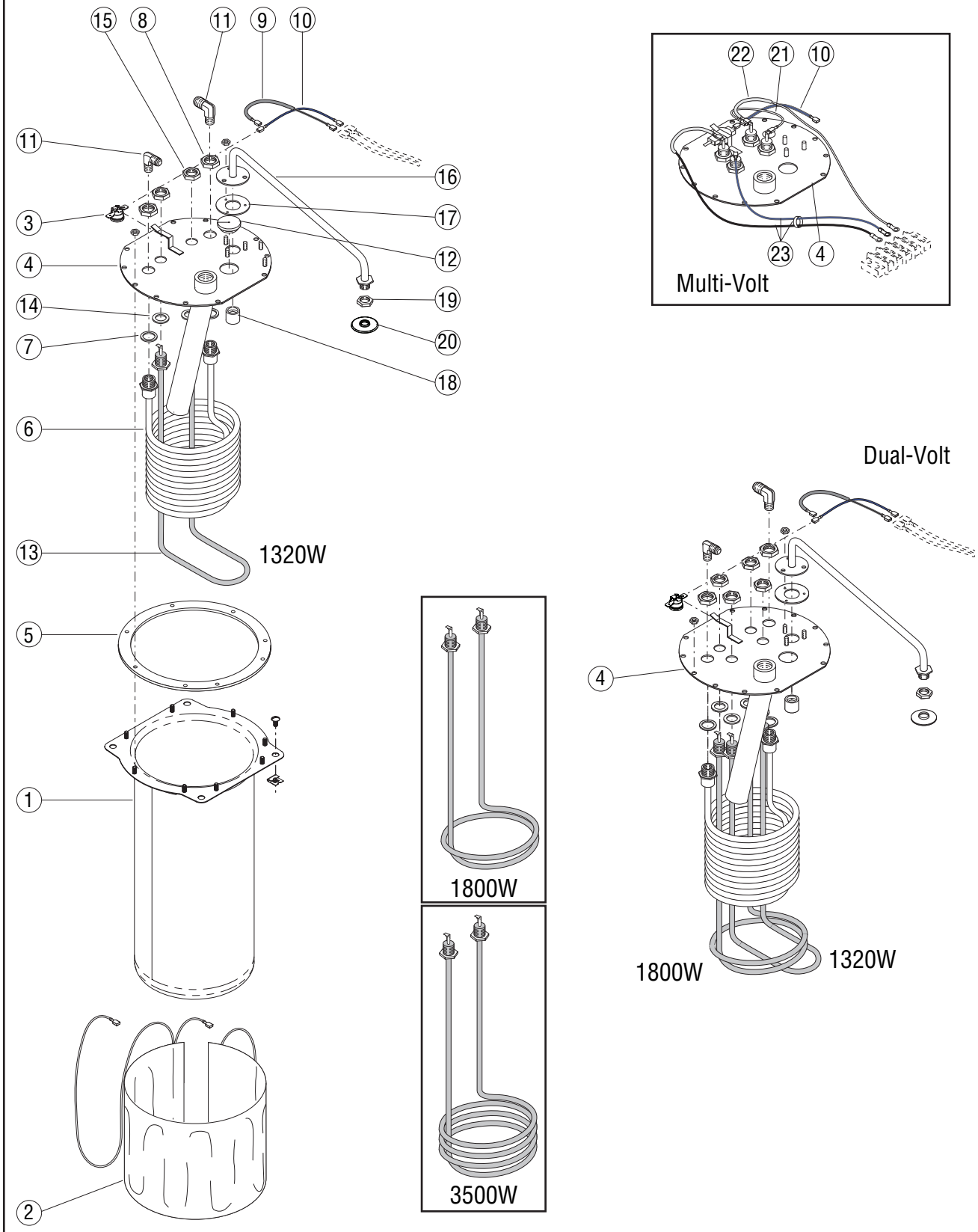

P3913.5

TANK AND COMPONENTS

ITEM	PART NO.	QTY. TWIN	QTY. SINGLE	DESCRIPTION
20	01082.0000	2	1	Sprayhead, 6-Hole (6-.078 Standard)
	01082.1000	#	#	3 Pack, 6-Hole (6-.078 Standard)
	01082.0004	2	1	Sprayhead, 5-Hole (5-.070 Optional)
	01082.0005	2	1	Sprayhead, 5-Hole (5-.057 Optional)
	01082.0007	2	1	Sprayhead, 1-Hole (1-.182 Pouch-Pack Funnel)
21	28242.0000	-	1	Lead, Electrical WHI (Tank Heater Jumper)
22	28173.0000	-	1	Thermal Cut Off (Tank Heater to Upper Terminal Block)
23	28174.0000	-	1	Thermal Cut Off Harness (Tank Heater to Upper Terminal Block)
The Following Items Are Not Illustrated				
24	22918.0000	-	1	TCO 128°C Male - Female (CE) Includes # 1 & 2
	22918.0001	-	1	TCO 291°C Male - Female (CE) Includes # 1 & 2
25	04776.0000	-	1	TCO 128°C Male - Female (CE)
	20211.0100	-	1	TCO 167°C Female - Female BLK (CE)
26	04119.0000	1	1	Tank W/Blanket Warmer, 120V
	04133.0000	1	1	Tank W/Blanket Warmer, 220V
27	25319.1000	-	1	Tank Assy, 1320W 120V (Includes # 1-5,9,10,13-18) w/o Faucet
	25319.1001	-	1	Tank Assy, 1800W 120V (Includes # 1-5,9,10,13-18) w/o Faucet
	25319.1002	1	1	Tank Assy, 3500W 120/240V (Includes # 1-5,9,10,13-18) w/o Faucet
	25319.1010	1	-	Tank Assy, 3000W 120/240V (Includes # 1-5,9,10,13-18) w/o Faucet
	----------*	-	1	Tank Assy, 1850W 220V (Includes # 1-5,9,10,13-18) w/o Faucet
	----------*	1	1	Tank Assy, 3500W 240V (Includes # 1-5,9,13-18) w/o Faucet
	25320.1000	-	1	Tank Assy, 1320W 120V (Includes # 1-11,13-18) w/Faucet
	25320.1001	-	1	Tank Assy, 1800W 120V (Includes # 1-11,13-18) w/Faucet
	25320.1002	1	1	Tank Assy, 3500W 240V (Includes # 1-11,13-18) w/Faucet
	25320.1007	1	1	Tank Assy, 3000W 120/240V (Includes # 1-11,13-18) w/Faucet
	25320.1012	-	1	Tank Assy, 3500W 240V (Includes # 1-11,13-18) w/Faucet
	25320.1017	-	1	Tank Assy, 1320/1800W DV (Includes # 1-11,13-18, 24-25) w/Faucet

* Indicates the part number listed is for reference only.

FILL BASIN AND LINES

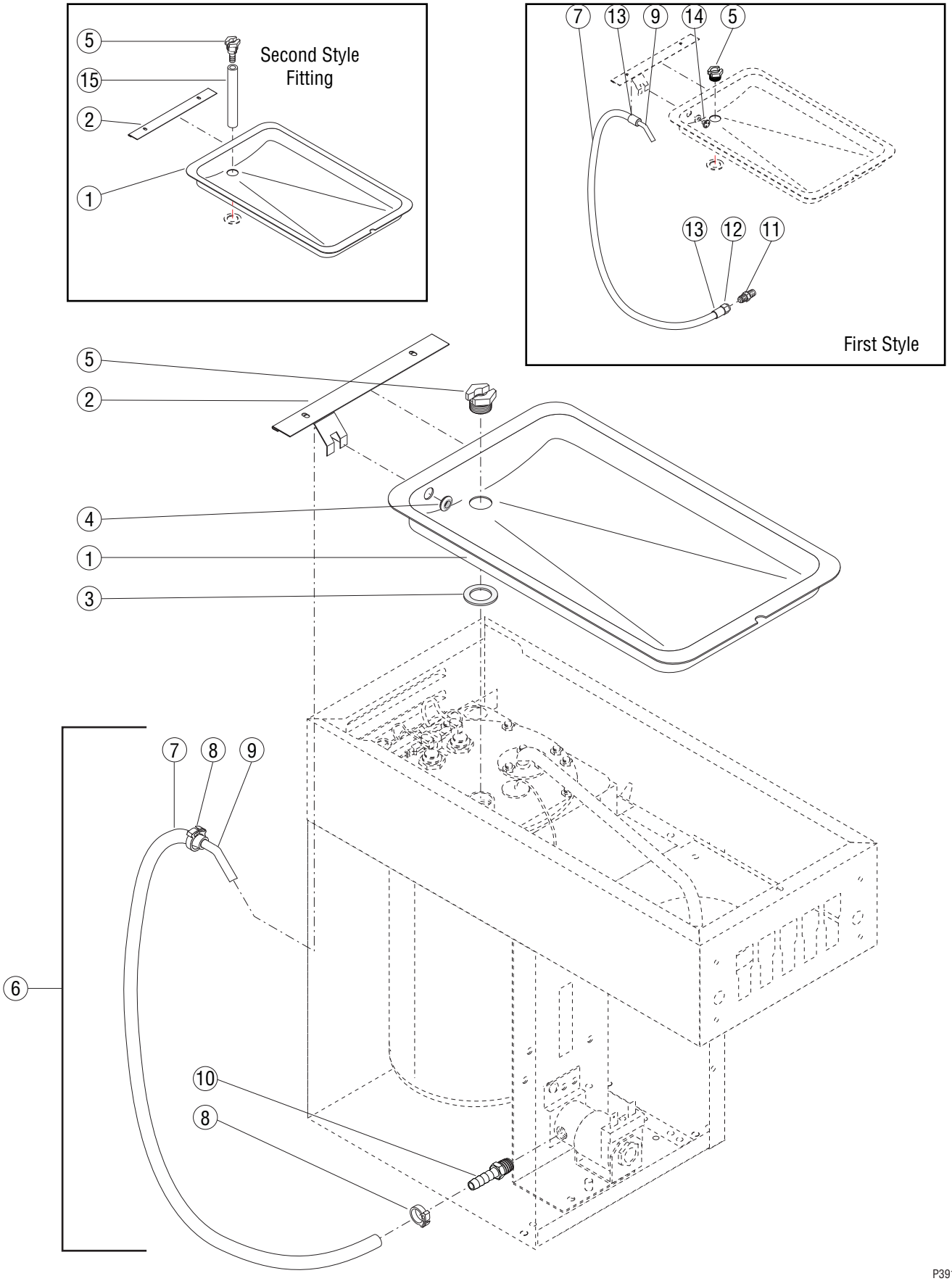

FILL BASIN AND LINES

ITEM	PART NO.	QTY. TWIN	QTY. SINGLE	DESCRIPTION
1	04270.0002	2	1	Fill Basin (Automatics)
	04270.0000	-	1	Fill Basin (Pour Overs)
2	27514.0000	2	1	Plate, Splash Guard (Automatics and Early Model Pour Overs)
	11424.0000	-	1	Plate, Splash Guard (Late Model Pour Overs)
3	01201.0000	2	1	Gasket, Tank Inlet
4	12928.0000	2	1	Grommet, Pour-In Basin (Automatics and Early Model Pour Overs)
5	01200.0000	2	1	Fitting, Tank Inlet .562″ Opening (First Style)
	32063.0000*	2	1	Fitting, Tank Inlet .312″ Opening (Second Style) (Obsolete)
	01212.0000	2	1	Fitting, Tank Inlet .382″ Opening (Third Style)
	01212.0001*	2	1	Fitting, Tank Inlet Tapered Opening (Obsolete)
6	12914.0002	2	1	Tube Assy. Fill 21.5″ Second Style (Includes # 4, 7-10)
7	11707.0003*	2	1	Tube, .25″ Dia. x 21.5″ (Order # 16)
8	12422.0000	4	2	Clamp, SNP - 6
9	12913.0000	2	1	Tube
10	22397.0001	2	1	Fitting, .25″ Barb x .125″ MPT (Late Models)
11	00402.0001	2	1	Fitting, .25″ Flare x .125″ MPT (Early Modeels)
12	00425.1000	2	1	Fitting, Swivel Nut
13	00419.0000	4	2	Ferrule, Crimp Type .25″
14	01426.0000*	-	1	Weld Pin, .25″ Dia. (Early Model Pour Overs Only)
15	28526.0021*	2	1	Tube, .313″ Dia. x 4.0″ (Order 17)

The Following Items Are Not Illustrated

16	11707.1000	-	-	Tube, .25″ Dia. x 12″
	11707.1001	-	-	Tube, .25″ Dia. x 36″
	11707.1002	-	-	Tube, .25″ Dia. x 120″
17	28526.1000	-	-	Tube, .313″ Dia. x 12″
	28526.1001	-	-	Tube, .313″ Dia. x 36″
	28526.1002	-	-	Tube, .313″ Dia. x 60″
	28526.1003	-	-	Tube, .313″ Dia. x 120″

* Indicates the part number listed is for reference only.

MANIFOLD AND LINES - LATER TWINS

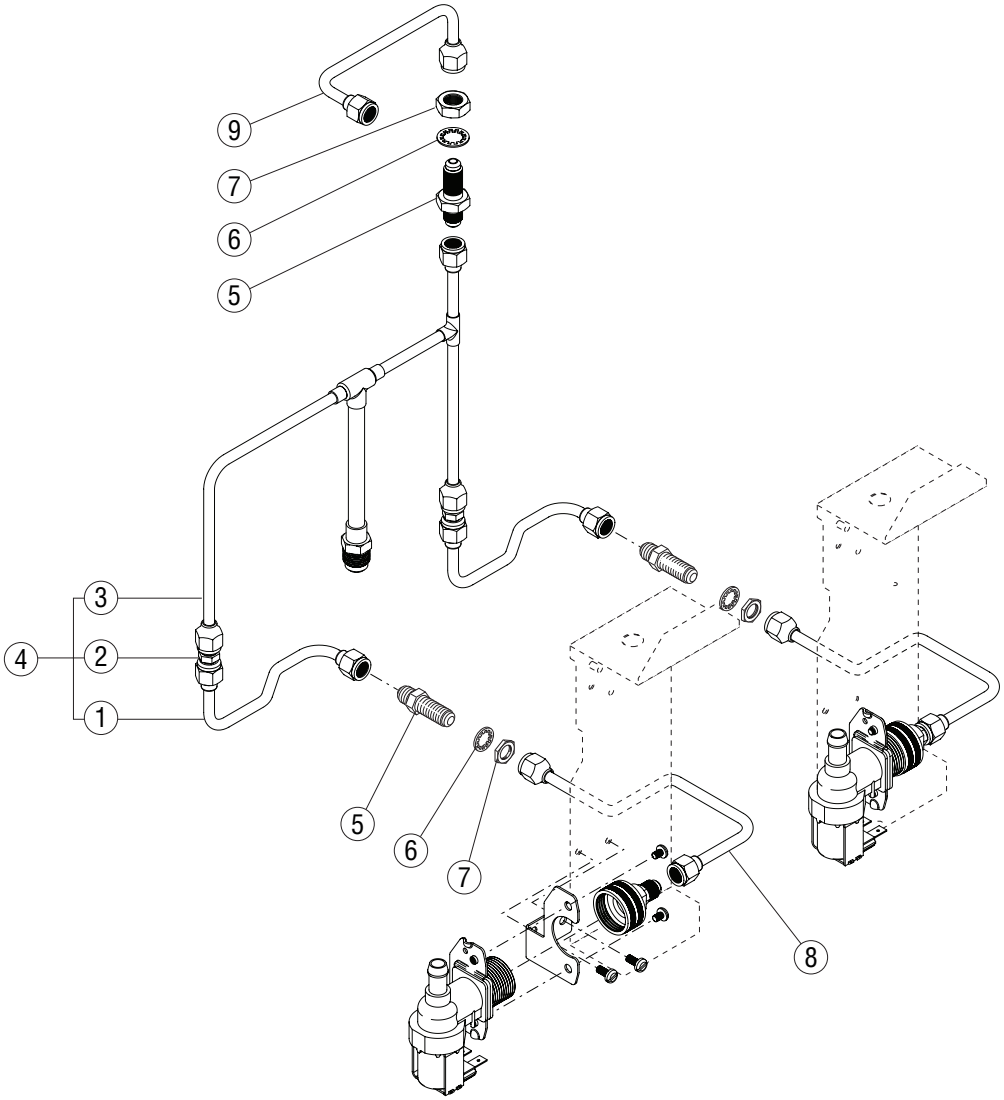

P4036.50

MANIFOLD AND LINES - LATER TWINS

ITEM	PART NO.	QTY. TWIN	QTY. SINGLE	DESCRIPTION
1	33643.0000	2	-	Tube, Manifold to Bulkhead
2	00436.0001	2	-	Union, Tn Pl-.250 Flare Male
3	41268.0000*	1	-	Tube Assy, Manifold (Not available, order item 4)
4	41267.0000	1	-	Tube Assy, Manifold (Late Models)
5	00459.0000	3	-	Fitting, Bulkhead .250˝ Flare
6	01532.0000	3	-	Lockwasher, Internal Tooth .438˝ I.D.
7	00463.0000	3	-	Nut, Hex .438˝-20
8	41281.0000	2	-	Tube, Bulkhead to Solenoid
9	23413.0000	1	-	Tube Assy, Bulkhead to Coil (Faucet)

* Indicates the part number listed is for reference only.

STRAINER/FLOW CONTROL AND LINES - EARLY TWINS

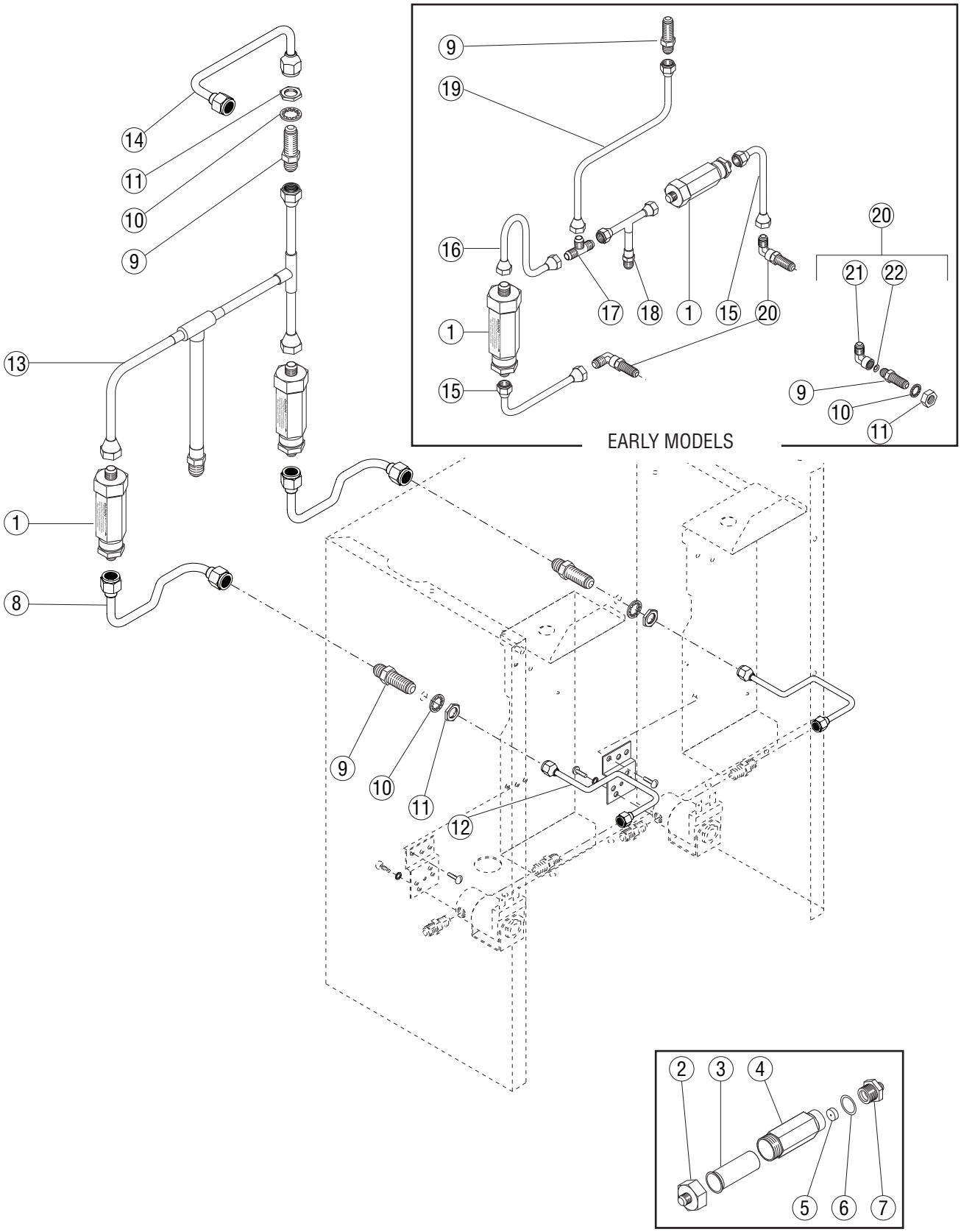

P3915.5

STRAINER/FLOW CONTROL AND LINES - EARLY TWINS

ITEM	PART NO.	QTY. TWIN	QTY. SINGLE	DESCRIPTION
1	22300.0222	2	1	Strainer/Flow Control Assy .222 GPM (Includes # 2 - 7)
2	22249.0000	2	1	Cap
3	23721.0000	2	1	Screen
4	22312.0000*	2	1	Housing (Order # 1)
5	20526.1222	2	1	Flow Washer/Gasket Set, .222 GPM (Includes # 6)
6	01155.0000	2	1	Gasket
7	01154.0000	2	1	Fitting, Flow Control Outlet
8	33643.0000	2	-	Tube, Strainer/Flow Control to Bulkhead (Late Models)
9	00459.0000	3	1	Fitting, Bulkhead .250˝ Flare
10	01532.0000	3	1	Lockwasher, Internal Tooth .438˝ I.D.
11	00463.0000	3	1	Nut, Hex .438˝-20
12	41281.0000	2	-	Tube, Bulkhead to Solenoid
13	33637.0000	1	-	Tube Assy, Manifold (Late Models)
14	23413.0000	1	-	Tube Assy, Bulkhead to Coil (Late Models)
15	21814.0011	2	-	Tube Assy, Strainer/Flow Control to Bulkhead Fittings (Early Models)
16	26318.0000	1	-	Tube Assy, Tee to Left Strainer/Flow Control (Early Models)
17	20577.0001	1	-	Tee .25˝ Flare (Early Models)
18	24220.0000	1	-	Tube Assy (Early Models)
19	26301.0000	1	-	Tube Assy, Tee to Bulkhead (Early Models)
20	23924.0000	2	-	Fitting Assy, 90° Bulkhead .250” Flare (Early Models)
21	23925.0000	2	-	Elbow, 90° Tube .25˝OD to .25˝ Fem Flare
22	24684.0000	2	-	Gasket, .25˝ Flare (Copper)

* Indicates the part number listed is for reference only.

MANIFOLD ASSEMBLIES - LATER SINGLES

3rd STYLE

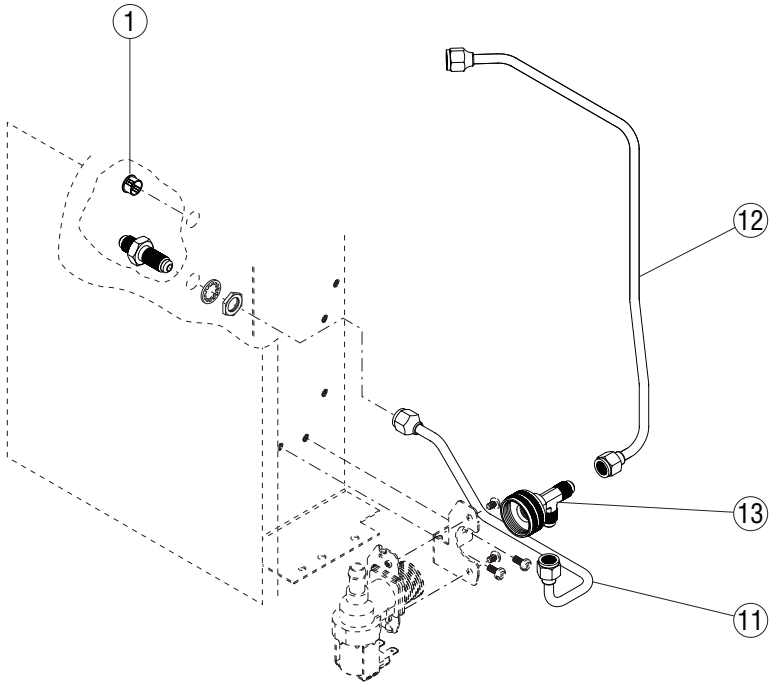

2nd STYLE

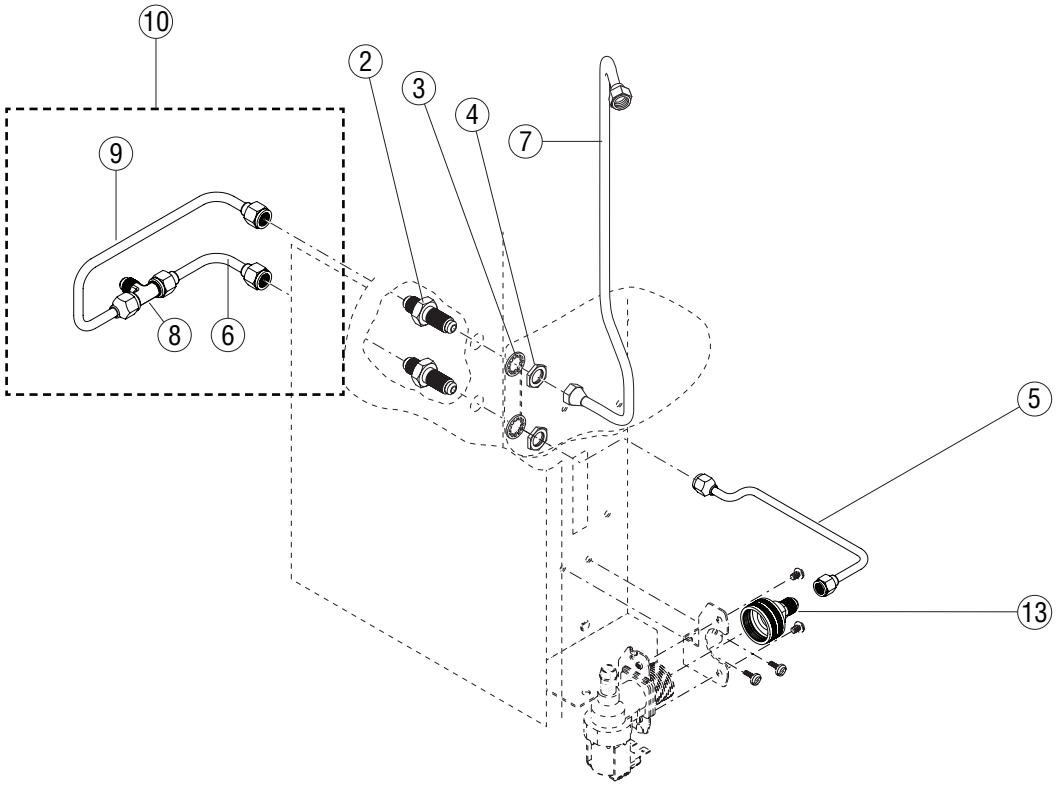

P4037.85

MANIFOLD ASSEMBLIES - LATER SINGLES

ITEM	PART NO.	QTY. TWIN	QTY. SINGLE	DESCRIPTION
1	00669.0003	-	1	Plug, Hole-Nyl Blk .43 Hole Dia
2	00459.0001	-	1	Fitting, Bulkhead .250˝ Flare (1 Additional used on 2nd Style)
3	01532.0000	-	1	Lockwasher, Internal Tooth .438˝ I.D. (1 Additional used on 2nd Style)
4	00463.0000	-	1	Nut, Hex .438˝-20 (1 Additional used on 2nd Style)
5	41252.0000	-	1	Tube, Bulkhead to Solenoid
6	21814.0016	-	1	Tube
7	20690.0000	-	1	Tube Assy, Bulkhead to Coil
8	20577.0001	-	1	Tee .25˝ Flare
9	41257.0000	-	1	Tube Assy,
10	41254.0000	-	1	Tube Assy,
11	41252.0001	-	1	Tube Assy, Bulkhead To Tee (3rd Style)
12	20690.0003	-	1	Tube Assy, Tee To Tank Coil (3rd Style)
13	37297.1002	-	1	Fitting, ¼˝ Flare X ¾˝ Fthrd (2nd Style)
	37297.1005	-	1	Tee,.125 Mpt X .75 Hose (3rd Style)

(2nd Style)

* Indicates the part number listed is for reference only.

STRAINER/FLOW CONTROL - SECOND STYLE SINGLES

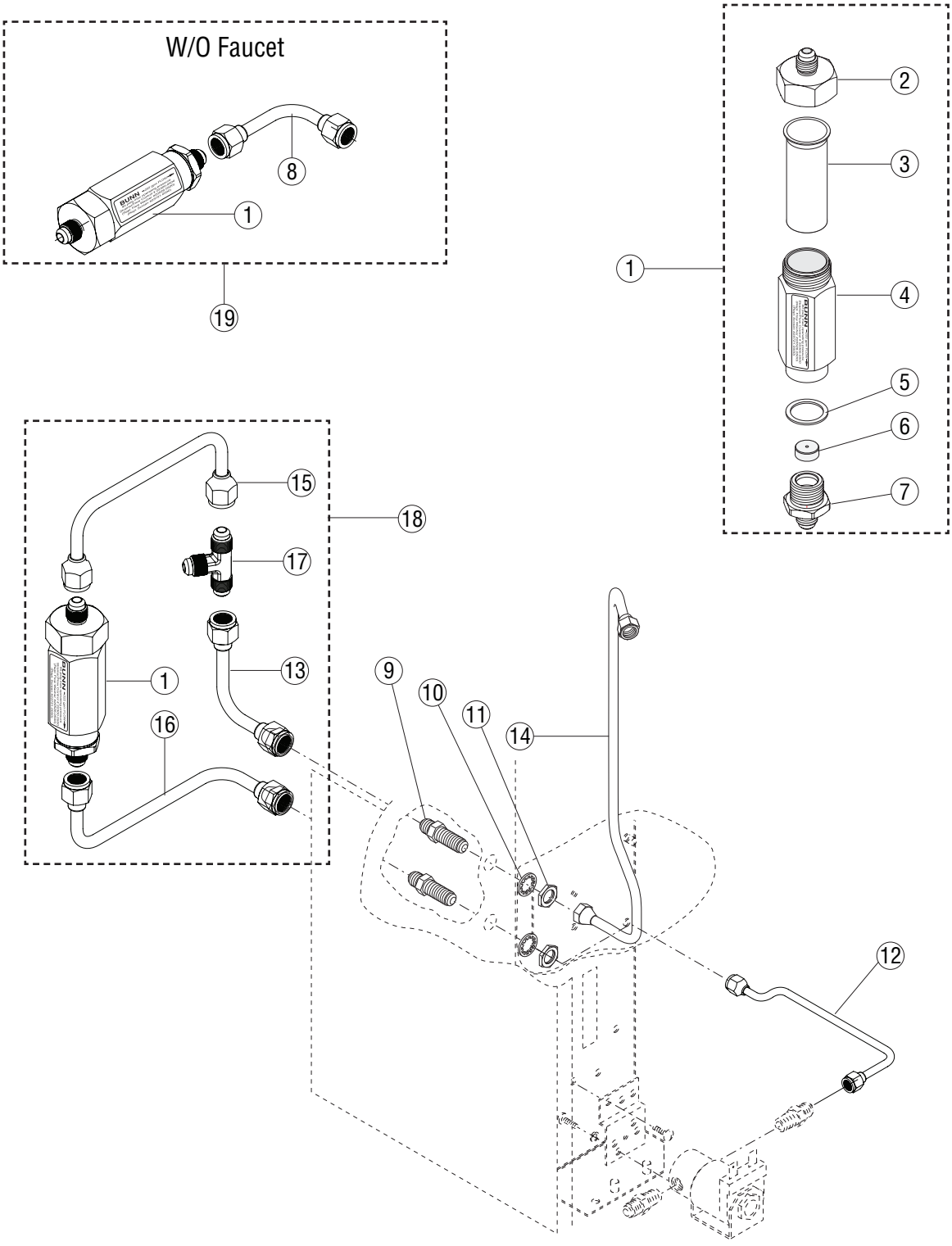

STRAINER/FLOW CONTROL - SECOND STYLE SINGLES

ITEM	PART NO.	QTY. TWIN	QTY. SINGLE	DESCRIPTION
1	22300.0222	2	1	Strainer/Flow Control Assy .222 GPM (Includes # 2 - 7)
2	22249.0000	2	1	Cap
3	23721.0000	2	1	Screen
4	22312.0000*	2	1	Housing (Order # 1)
5	01155.0000	2	1	Gasket
6	20526.1222	2	1	Flow Washer/Gasket Set, .222 GPM (Includes # 5)
7	01154.0000	2	1	Fitting, Flow Control Outlet
8	00310.0000	-	1	Tube, Strainer/Flow Control to Bulkhead
9	00459.0000	3	1	Fitting, Bulkhead .250˝ Flare
10	01532.0000	3	1	Lockwasher, Internal Tooth .438˝ I.D.
11	00463.0000	3	1	Nut, Hex .438˝-20
12	41252.0000	-	1	Tube, Bulkhead to Solenoid
13	21814.0016	1	-	Tube
14	20690.0000	-	1	Tube Assy, Bulkhead to Coil
15	26216.0000	-	1	Tube Assy,
16	26217.0000	-	1	Tube Assy
17	20577.0001	1	-	Tee .25˝ Flare
18	24394.0222	1	-	Manifold Assy (With Faucet)
19	24356.0222	1	-	Manifold Assy (W/O Faucet)

* Indicates the part number listed is for reference only.

STRAINER/FLOW CONTROL - FIRST STYLE SINGLES

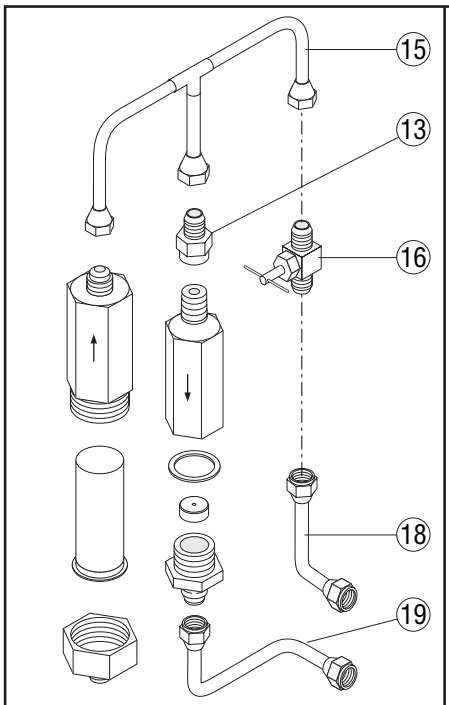

FIRST TYPE W/FAUCET

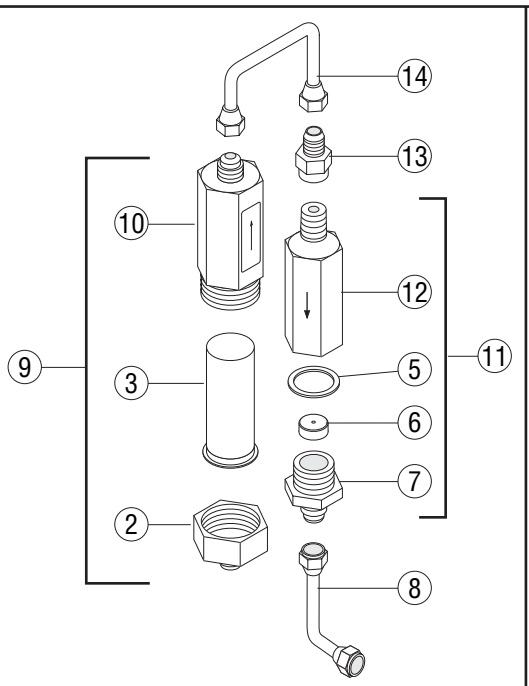

FIRST TYPE W/O FAUCET

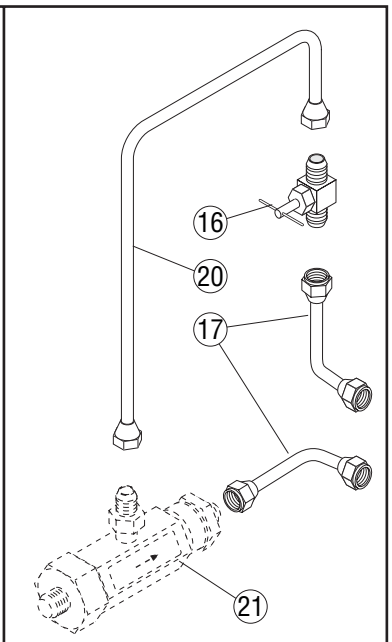

SECOND TYPE W/FAUCET

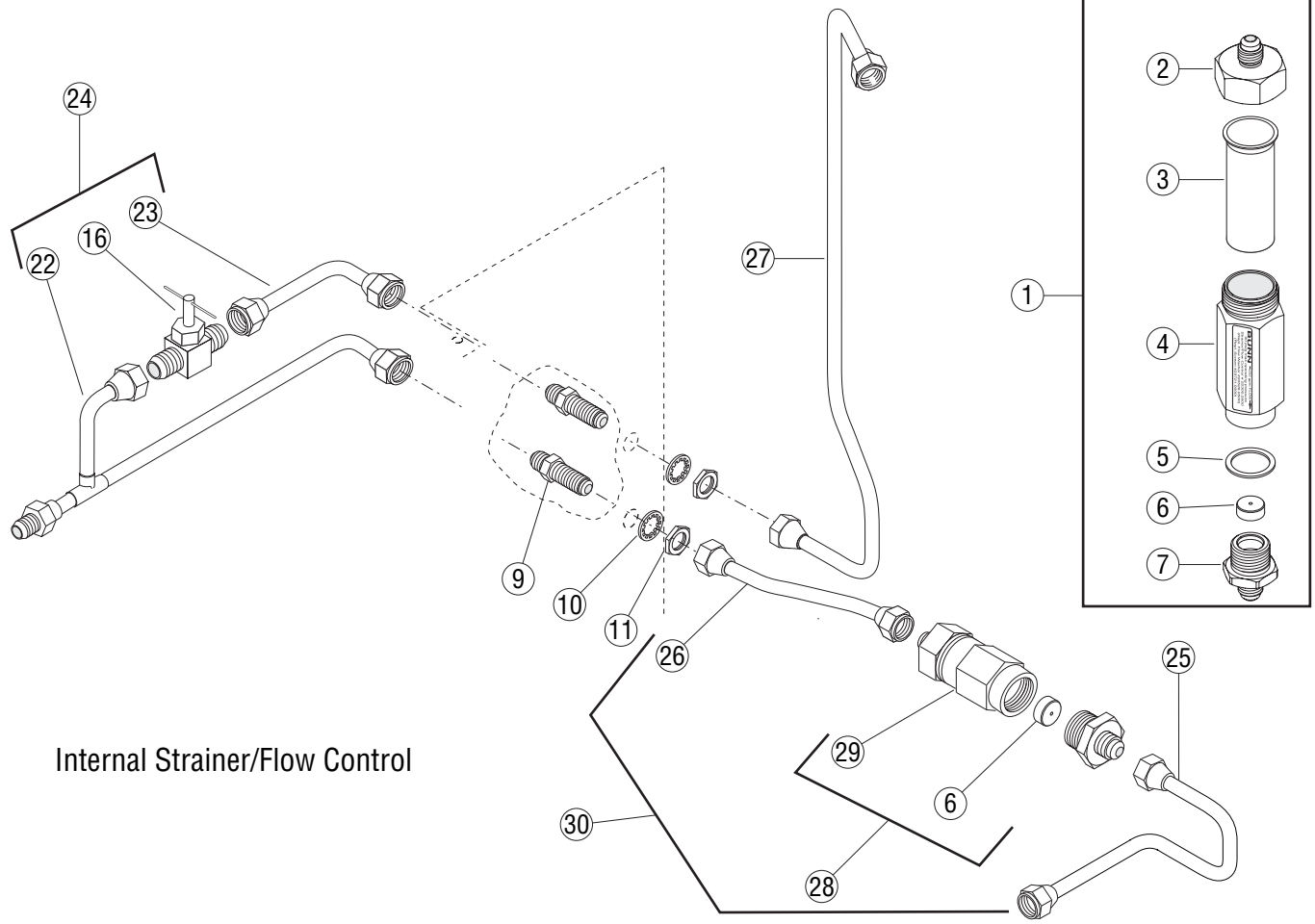

Internal Strainer/Flow Control

P3917

STRAINER/FLOW CONTROL - FIRST STYLE SINGLES

ITEM	PART NO.	QTY. TWIN	QTY. SINGLE	DESCRIPTION
1	22300.0222	2	1	Strainer/Flow Control Assy. .222 GPM (Includes # 2 - 7)
2	22249.0000	2	1	Cap
3	23721.0000	2	1	Screen
4	22312.0000*	2	1	Housing (Order # 1)
5	01155.0000	2	1	Gasket
6	20526.1222	2	1	Flow Washer/Gasket Set, .222 GPM (Includes # 5)
7	01154.0000	2	1	Fitting, Flow Control Outlet
8	00310.0000	-	1	Tube Assy. Strainer/Flow Control to Bulkhead
9	23820.1000	-	1	Strainer Assy. .250˝ Flare (Includes # 2,3,10)
10	23819.0000*	-	1	Housing (Order # 9)
11	20528.1222	-	1	Flow Control Assy. .222 GPM (Includes # 5,6,7,12)
12	20527.0001*	-	1	Housing (Order # 11)
13	00445.0001	-	1	Connector, .250˝ Flare x .125˝ FPT
14	04572.0000	-	1	Tube Assy.
15	12909.0000	-	1	Tube Assy. Manifold
16	00484.0001	-	1	Needle Valve, .25˝ Flare
17	21812.0002	-	2	Tube Assy.
18	00310.0002	-	1	Tube Assy.
19	12908.0000	-	1	Tube Assy.
20	24393.0000	-	1	Tube Assy.
21	22312.0001*	-	1	Strainer/Flow Control Assy. NOT AVAILABLE (Refer to # 24394.0222)
22	20785.0000	-	1	Tube Assy. Manifold
23	21812.1006	-	1	Tube Assy.
24	20784.0000	-	1	Manifold/ Needle Valve Assy.
25	20786.1000	-	1	Tube Assy.
26	20782.1000	-	1	Tube Assy.
27	20690.0000	-	1	Tube Assy, Bulkhead to Coil
28	01148.0001	-	1	Strainer/Flow Control Assy. .222 GPM
29	01148.0000	-	1	Strainer/Flow Control Assy. .175 GPM
30	20783.0000	-	1	Strainer/Flow Control Assy. .222 GPM (Includes # 25,26,28)

* Indicates the part number listed is for reference only.

FILL SOLENOIDS

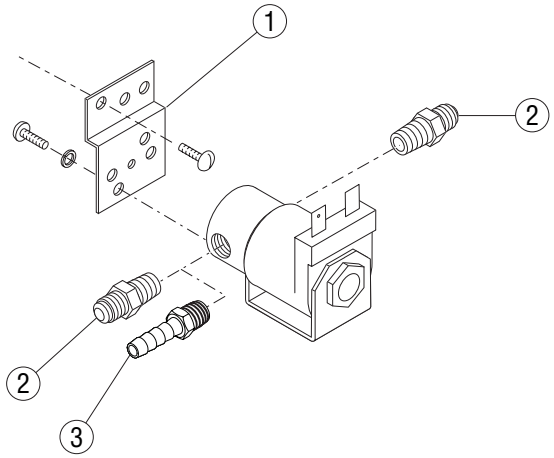

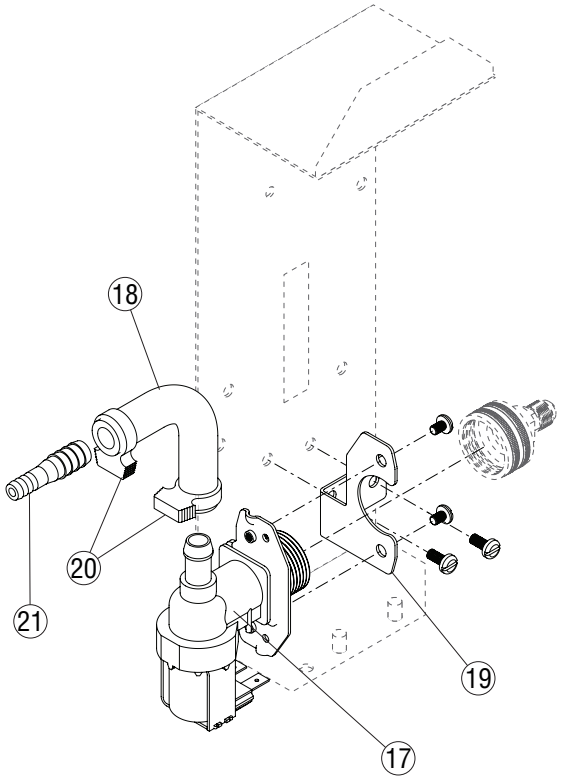

ELTEK

ASCO

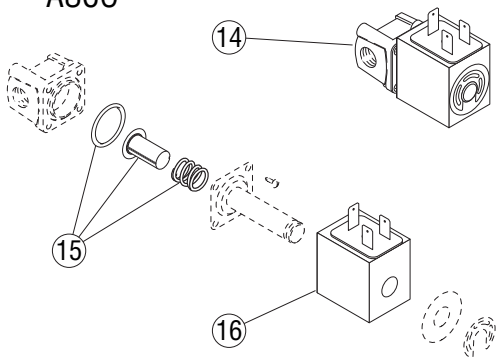

KIP

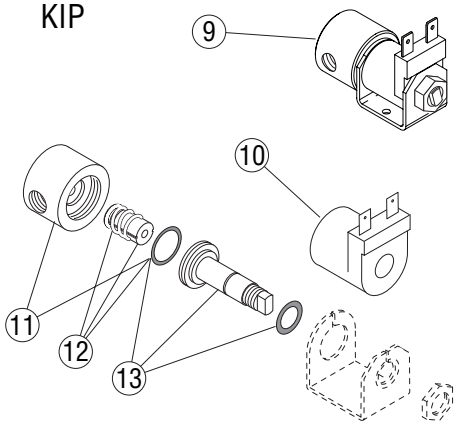

SKINNER

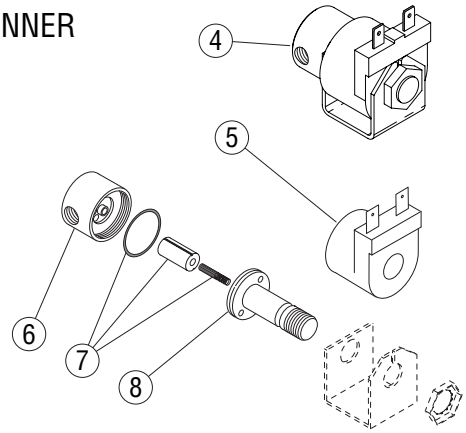

P3918

FILL SOLENOIDS

ITEM	PART NO.	QTY. TWIN	QTY. SINGLE	DESCRIPTION
1	07441.0000	2	1	Bracket, Solenoid Mounting
	02308.0000	4	2	Screw, #8-32 X .375˝ (Bracket - Bracket)
	01327.0000	4	2	Screw, Pan Head #10-32 x .375˝ (Bracket - Solenoid)
	01502.0000	4	2	Lockwasher, Split #10 (Bracket - Solenoid)
2	00402.0001	2	1	Connector, Male .25˝ Flare x .125˝ MPT (2 Used On Early Models)
3	22397.0001	2	1	Fitting, .25˝ Barb x .125˝ MPT (Current Models)
4	01085.0000	2	1	Solenoid Valve, 120V - 1.48” Dia Coil
	01975.0000	2	1	Solenoid Valve, 240V - 1.48” Dia Coil
	21180.0000	2	1	Solenoid Valve, 200V - 1.48” Dia Coil
5	01100.0000	2	1	Coil - 240V
	01101.0000	2	1	Coil - 120V
	21181.0000	2	1	Coil - 200V
6	01079.0000	2	1	Base
7	01111.0000	2	1	Repair Kit
8	01116.0000	-	1	Guide
9	01085.0002	2	1	Solenoid Valve, 120V - 1.0” Dia Coil
10	28480.0000	2	1	Coil - 120V
11	28479.0000	1	1	Solenoid Valve Base Kit - 1” Dia Coil (Includes O-ring)
12	01111.0002	1	1	Repair Kit - 1” Dia Coil (Includes Plunger, Spring and O-ring)
13	28481.0000	1	1	Guide Kit - 1” Dia Coil (Includes Washer & O-ring)
14	28005.0000	2	1	Solenoid Valve, 240V
15	28021.0000	2	1	Repair Kit
16	28020.0000	2	1	Coil - 240V
17	42025.0000	2	1	Kit, Universal Replacement Solenoid, 120V
	42025.0001	2	1	Kit, Universal Replacement Solenoid, 230V
	41255.0002	-	1	Solenoid Valve 200V
	41255.0003	-	1	Solenoid Valve 100V
	32283.0000	4	2	Screw, Sst Sltd Pnh M4 X 6MM
	41935.0000	2	1	Kit, Solenoid Retrofit, 120V (Includes 17 - 22)
	41935.0001	2	1	Kit, Solenoid Retrofit, 230V (Includes 17 - 22)
	46884.0000	2	1	Strainer
18	20976.0006*	2	1	Tube, Silicone .38ID x .62OD x 4.50 (Order # 22)
19	41256.0000	2	1	Bracket
	02308.0000	4	2	Screw, #8-32 X .375˝ (Bracket - Bracket)
20	12422.0001	4	2	Clamp, SNP - 10
21	26443.0001	2	1	Reducer, SST Hose Barb .38X.25
The Following Items Are Not Illustrated				
22	20976.1000	-	-	Tube, .375” ID x 12” (Use as required)
	20976.1001	-	-	Tube, .375” ID x 36” (Use as required)
	20976.1002	-	-	Tube, .375” ID x 120” (Use as required)

* Indicates the part number listed is for reference only.

FAUCET AND TUBING

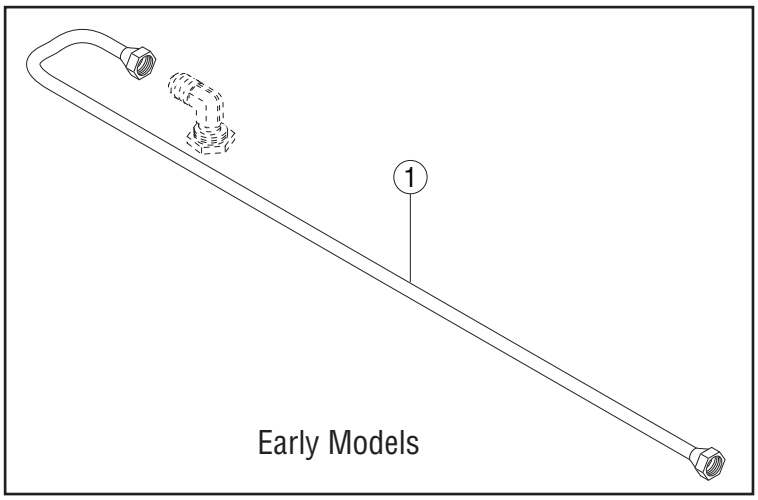

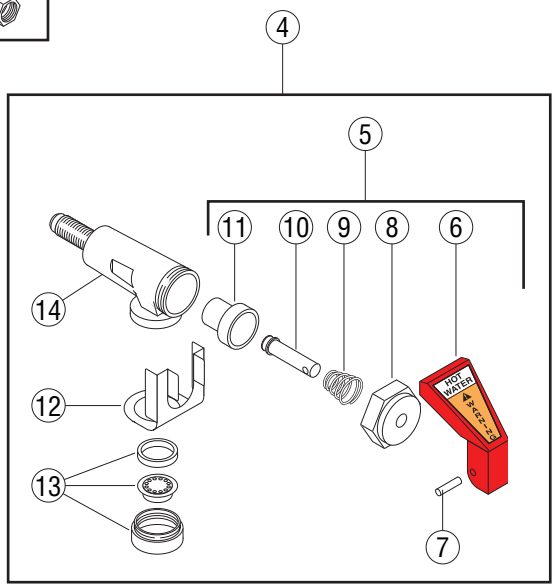

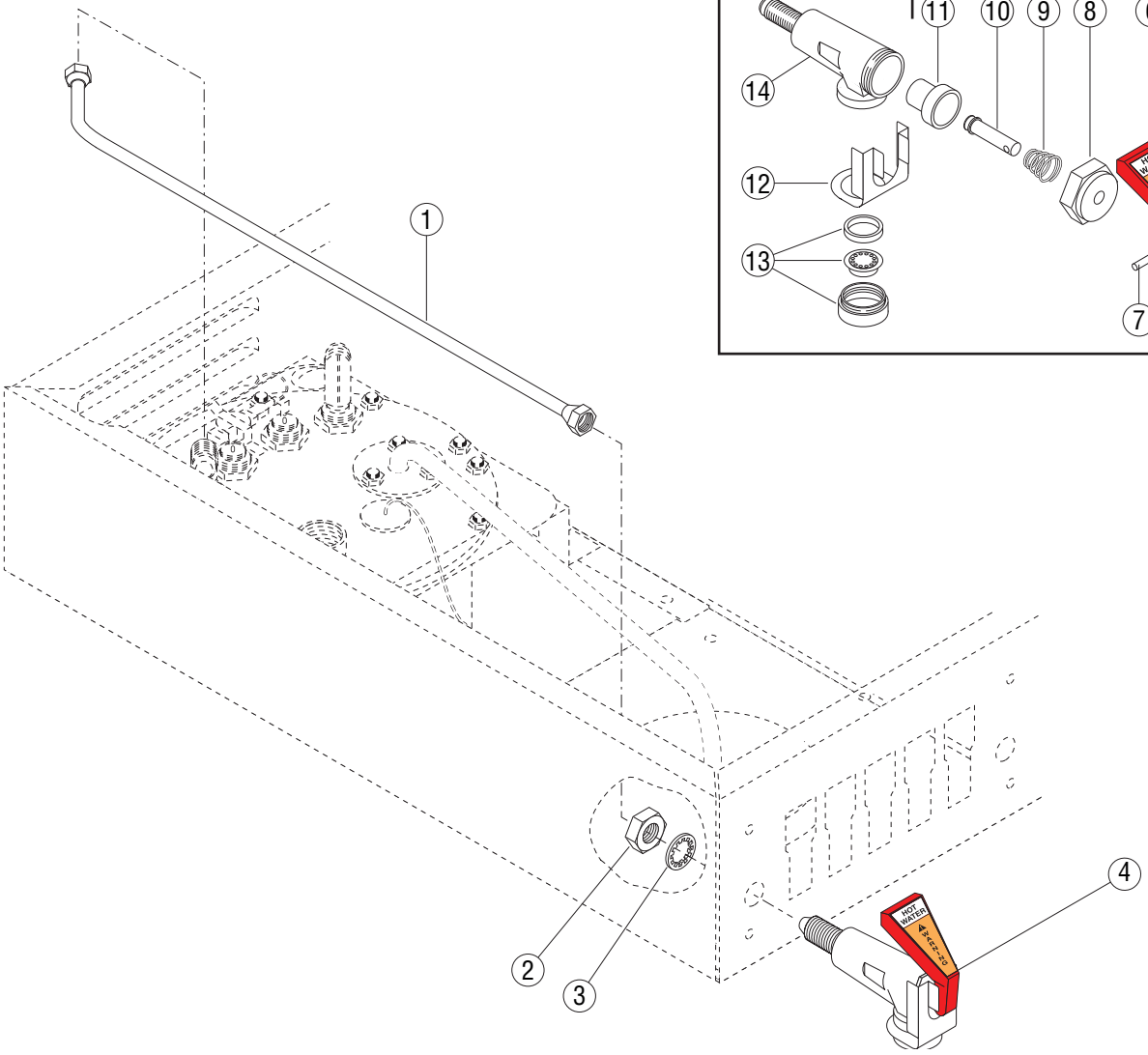

P3919

FAUCET AND TUBING

ITEM	PART NO.	QTY. TWIN	QTY. SINGLE	DESCRIPTION
1	20691.0001	1	1	Tube Assembly, Coil to Faucet (Early Models)
	20691.0000	1	1	Tube Assembly, Coil to Faucet (Late Models)
2	00463.0000	1	1	Faucet Jam Nut
3	01532.0000	1	1	Lockwasher, Internal Tooth .438” I.D.
4	12915.0000	1	1	Faucet, Hot Water (Includes items 5 thru 14)
5	13061.0000	1	1	Faucet Handle/Stem Assembly (Includes items 6 thru 11)
6	13053.0000	1	1	Faucet Handle Kit (Includes item 7)
7	02858.0000	1	1	Pin, Spring .125” Dia x .50”
8	13060.0000	1	1	Faucet Bonnet Nut
9	13055.0000	1	1	Faucet Spring
10	13054.0000	1	1	Faucet Stem
11	13056.0000	1	1	Faucet Seat Cup
12	13057.0000	1	1	Faucet Safety Clip
13	13058.1000	1	1	Kit, Faucet Aerator
14	35129.0000	1	1	Body, Faucet (Not available. Order item 4)

* Indicates the part number listed is for reference only.

UPPER & SIDE HOUSING WARMERS

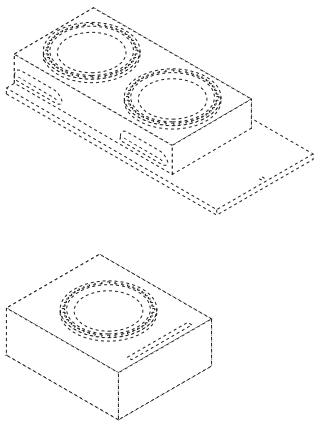

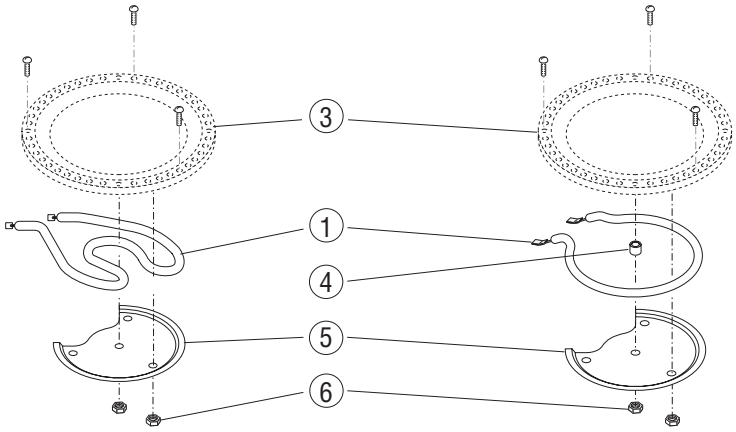

'A" &"B" MODELS ONLY

120V & 120/240V MODELS ONLY

BASE WARMERS

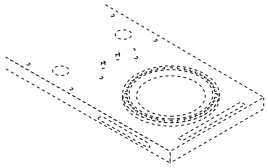

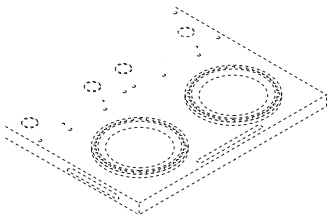

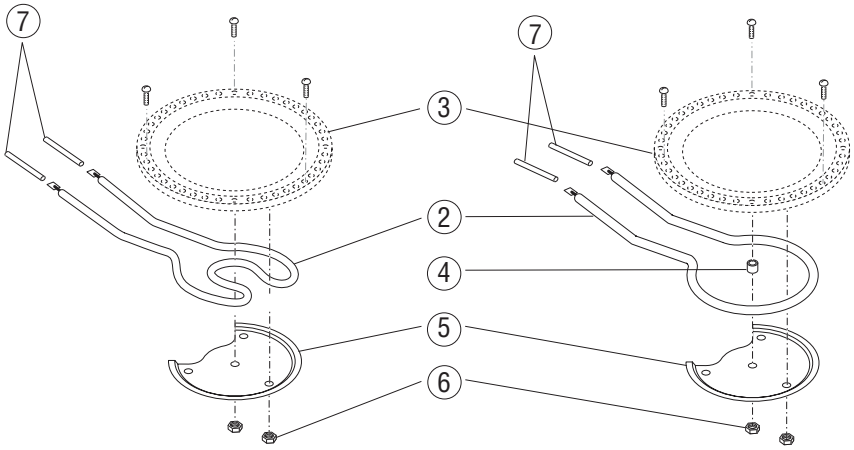

'A" &"B" MODELS ONLY

120V & 120/240V MODELS ONLY

P3701.7

WARMER ASSEMBLIES

ITEM	PART NO.	QTY. TWIN	QTY. SINGLE	DESCRIPTION
A	03652.0000	1		Warmer Assembly 120V, Top & Side Warmers (Includes items 1, & 3 - 6)
	11440.0009	1		Warmer Assembly 220V, Top & Side Warmers (Includes items 1, 3, 5, & 6)
	11440.0011	1		Warmer Assembly 200V, Top & Side Warmers (Includes items 1, 3, 5, & 6)
	01303.0000	3		Screw, Pan Head - SST #4-40 x .5˝
	00916.0000	3		Fastener, J-Type #4-40
1	01227.0000	1		Warmer Element 120V Top & Side Warmers
	01951.0000	1		Warmer Element 220V Top & Side Warmers (“A” Models)
	01951.0001	1		Warmer Element 200V Top & Side Warmers (“B” Models)
B	11440.0005	1		Warmer Assembly 120V, Base Warmers (Includes items 2-7) (Single CW)
	11440.0008	1		Warmer Assembly 220V, Base Warmers (Includes items 2, 3, 5, & 6)
	11440.0010	1		Warmer Assembly 200V, Base Warmers (Includes items 2, 3, 5, & 6)
	01303.0000	3		Screw, Pan Head - SST #4-40 x .5˝
	00916.0000	3		Fastener, J-Type #4-40
2	11442.0000	1		Warmer Element 120V Base Warmers (Single CW)
	11438.0000	1		Warmer Element 220V Base Warmers (“A” Models)
	11438.0001	1		Warmer Element 200V Base Warmers (“B” Models)
3	03656.0000	1		Warmer Dish, Blk 45 Hole
4	13042.0001	1		Spacer, (120V Models Only)
5	05212.0000	1		Plate, Element Retaining
6	00970.0000	2		Nut, Keps #8-32
7	04828.0001*	2		Tube, Silicone .25˝ Dia x 1.875˝ LG. (Order Item 8)
The Following Items Are Not Illustrated				
8	04828.1001	-		Tube, Silicone .25˝ Dia. x 24˝ LG (Use as required)
9	24785.0002	1		Galley Kit, “C” Series, 3 Warmers
10	21016.0011	1		Ground Wire, 15.0˝ LG.- Lower Warmer to Ground Screw
11	21016.0012	1		Ground Wire, 10.0˝ LG.- Upper Warmer to Upper Warmer
12	21016.0027	1		Ground Wire, 26.0˝ LG.- Lower Warmer to Ground Screw

All warmers listed above are rated @ 100 watts

* Indicates the part number listed is for reference only.

ELECTRICAL AND OPERATING CONTROLS

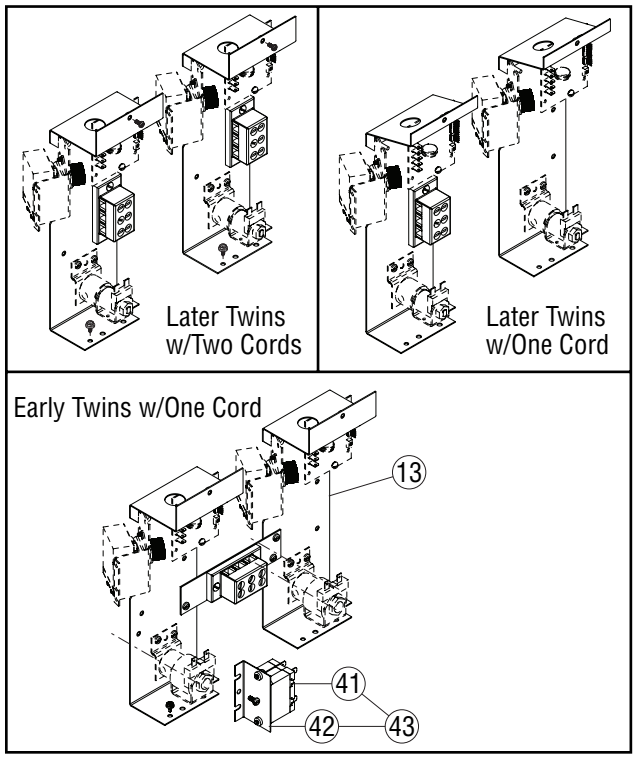

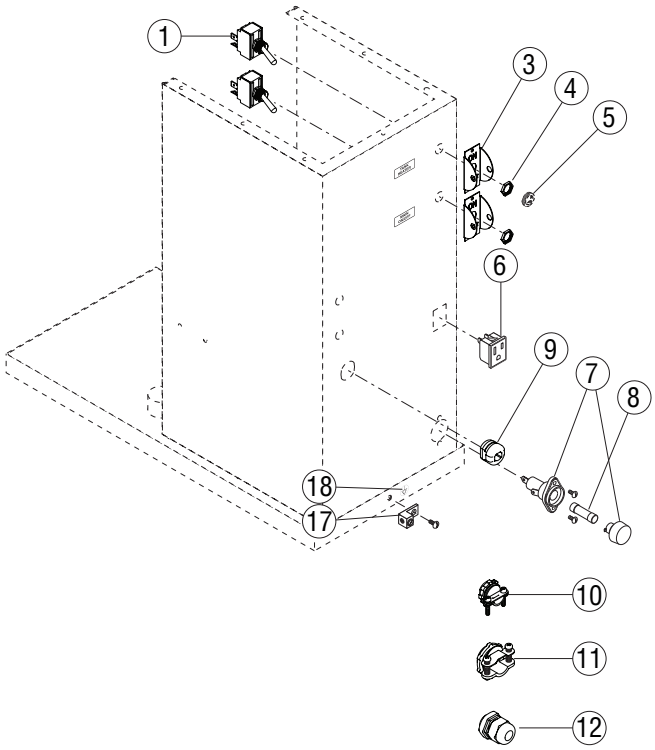

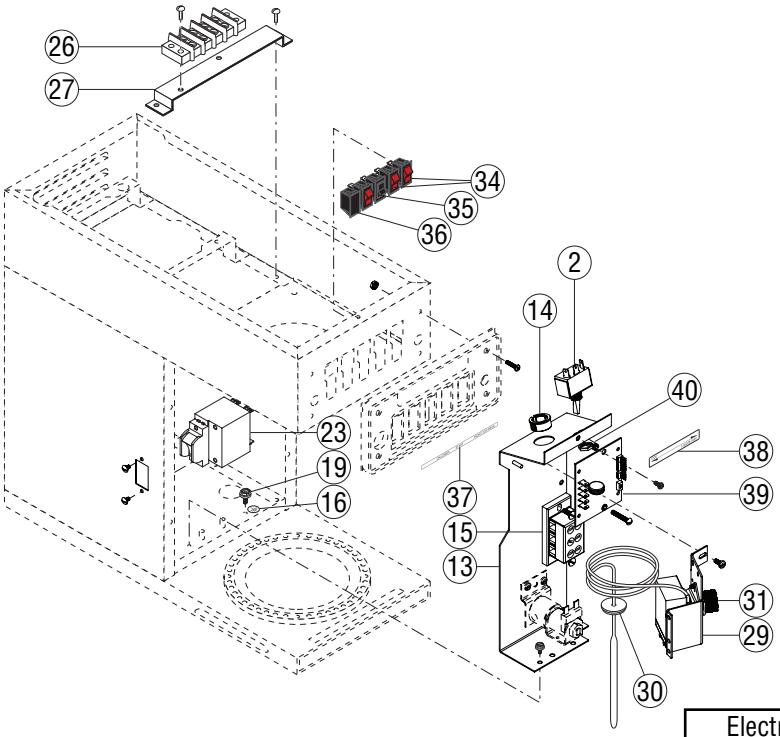

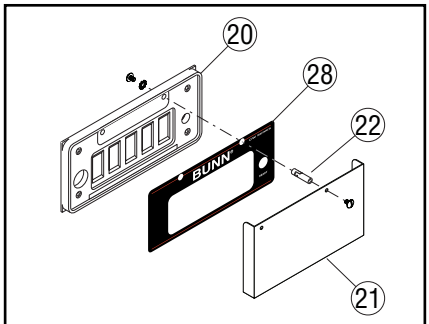

Brewers w/Switch Cover

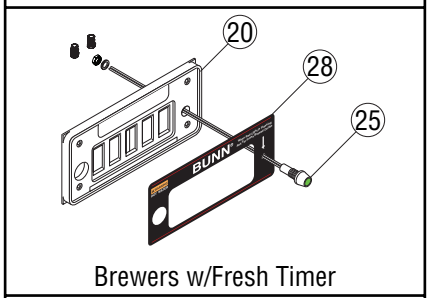

Brewers w/Fresh Timer

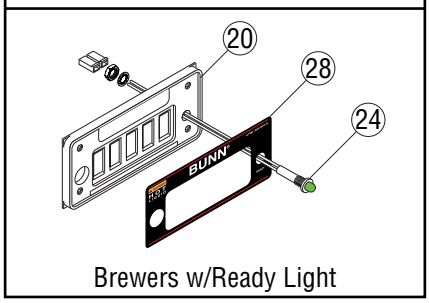

Brewers w/Ready Light

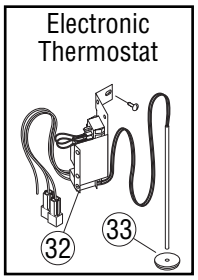

P3920.40

ELECTRICAL AND OPERATING CONTROLS

ITEM	PART NO.	QTY. TWIN	QTY. SINGLE	DESCRIPTION
1	28004.0000	-	2	Toggle Switch, (DPST) (Includes Hex Nut) (A Models)
	40763.0001	-	2	Toggle Switch, (DPST) (Includes Hex Nut) (4 Used on 0/6 Twin w/2 Cords)
2	23522.1001	-	1	Toggle Switch, (Dual Volt, SPDT) (Includes Hex Nut)
3	25102.0000	-	1	Bracket, Switch Guard (ON/OFF)
	25102.0001	-	1	Bracket, Switch Guard (I/0)
4	23696.0000	2	1	Hex Nut (2 Used on DV)
5	23697.0000	2	1	Plastic Face Nut
6	03628.0000	-	1	Receptacle, Grounded
7	28176.0000	-	1	Fuse Holder
	02308.0000	-	2	Screw, Pan Head #8-32 x .375"
8	22012.0002	-	1	Fuse, 20 amp
9	01686.0000	-	1	Bushing, Strain Relief (15A Models only)
10	01685.0000	-	1	Bushing, Strain Relief (20/35 & MV/DV Models)
11	01590.0000	1	-	Bushing, Strain Relief (2 Used on 2 Cord TWIN's)
12	05746.1000	1	1	Bushing, Strain Relief (A Models)
13	12698.0005	2	1	Bracket, Component Mounting (All Models Except 2 Cord Twins)
	12698.0004	2	-	Bracket, Component Mounting (2 Cord Twins Only)
	12698.0003	-	-	Bracket, Component Mounting (Single CW Only)
	02308.0000	2	1	Screw, Pan Head #8-32 x .375"
	02332.0001	2	1	Screw, Hex Crimptite #6-32 x .25"
14	00606.0000	2	1	Bushing .875 Dia.
15	01106.0000	-	1	Terminal Block, 2-pole 120V (Black-White)
	01106.0001	-	1	Terminal Block, 2-pole 240V (Black-Red)
	01106.0003	-	1	Terminal Block, 2-pole 230V (Brown-Blue) (CE)
	07038.0000	3	1	Terminal Block, 3-pole 120/240V (Black-White-Red)
	01317.0000	4	2	Screw #8-32 x .5"
16	00824.0002	1	1	Decal, Ground (One Additional w/Two Cords)
17	27705.0000	-	1	Terminal Lug (CE)
	01327.0000	-	1	Screw, PNH 10-32 x .375"
18	00824.0001	1	1	Decal, Equipotentiality (CE Only)
19	02337.0001	2	1	Ground Screw, Hex Head #10 x .375" (Self Tap)
	01309.0000	2	1	Ground Screw, Pan Head #10-32 x .5" (Square Washer)
20	13352.0008	2	1	Control Panel
	13352.0011	2	1	Control Panel (w/Switch Cover)
	02301.0000	8	4	Screw, Phillips Pan Head #6-32 x .625"
	00973.0000	8	4	Nut, KEPS #6-32
21	27429.0000	2	1	Switch Cover (Brass)
	27429.0002	2	1	Switch Cover (SST)
	01308.0000	4	2	Screw, SST Truss Head #6-32 x .25" (Brass Screw No Longer Available)
22	12148.0000	2	1	Spacer, Hinged
	01308.0000	4	2	Screw, SST Truss Head #6-32 x .25"
	01510.0000	4	2	Lockwasher, #6 External Tooth
23	38894.0001	1	1	Switch, On/Off (One Additional w/ Two Power Cord Twins)
	01308.0002	2	2	Screw, TRH #6-32 x .25"

Continued on next page

* Indicates the part number listed is for reference only.

ELECTRICAL AND OPERATING CONTROLS

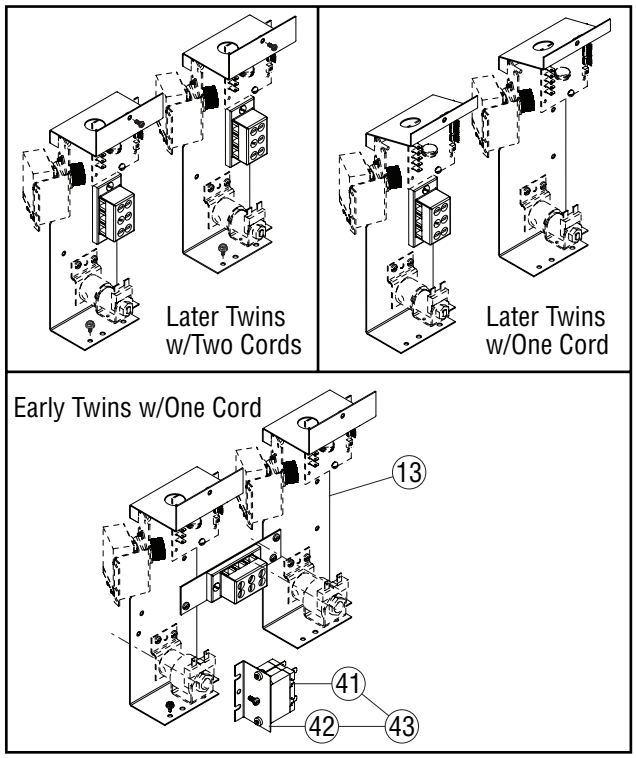

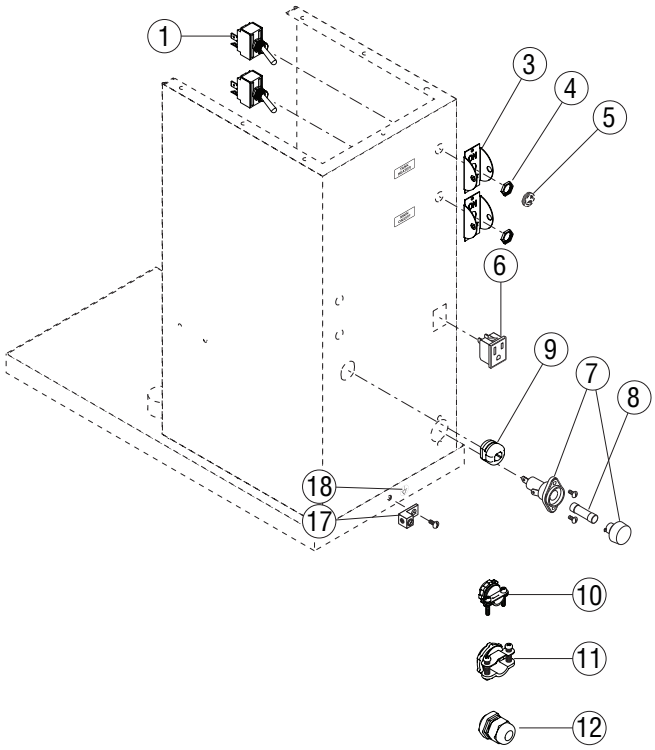

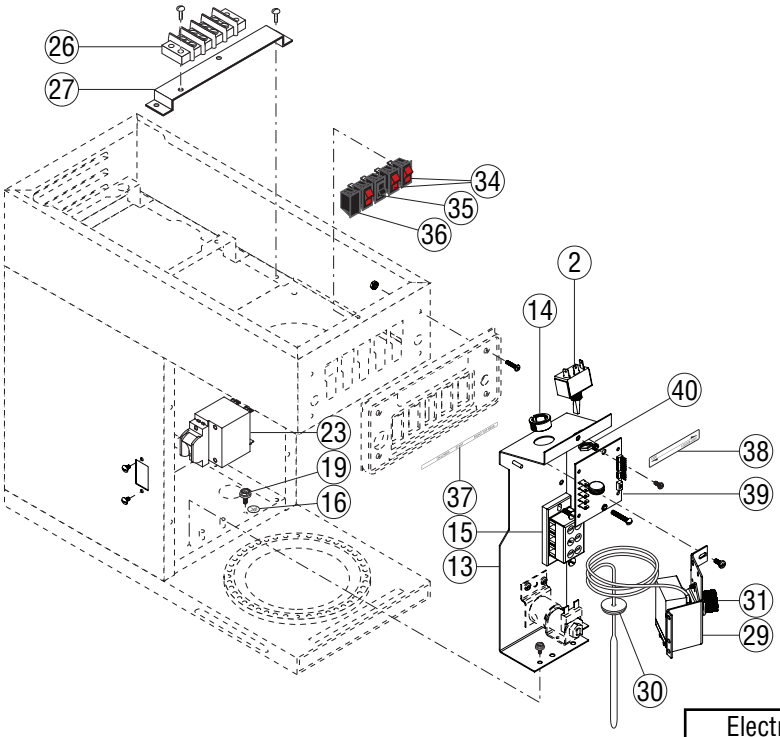

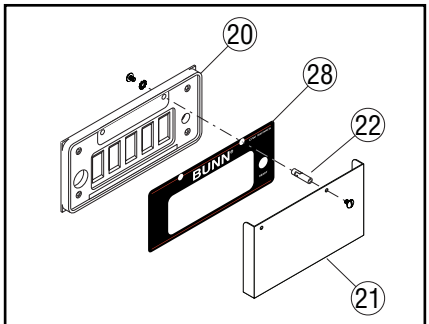

Brewers w/Switch Cover

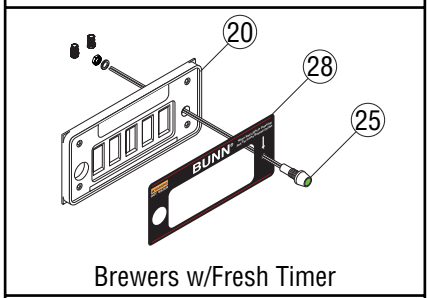

Brewers w/Fresh Timer

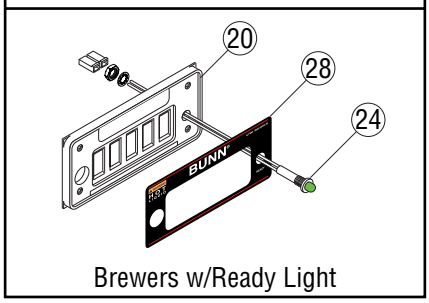

Brewers w/Ready Light

Electronic Thermostat

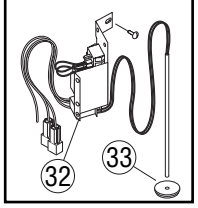

P3920.40

ELECTRICAL AND OPERATING CONTROLS

ITEM	PART NO.	QTY. TWIN	QTY. SINGLE	DESCRIPTION
24	47575.1000	2	1	Ready Light, 120V Green LED (Includes Hardware as Shown)
	47575.1001	2	1	Ready Light, 240V Green LED (Includes Hardware as Shown)
	04243.0000	4	2	Terminal Housing, Plastic
25	12517.0003	2	1	LED, Fresh Timer (Includes Hardware as Shown)
	25292.0000	2	1	Lock Washer, M6
	34130.0000	2	1	Nut, M6
	03851.0000	4	2	Wire Nut
26	28177.0000	-	1	Terminal Block
	01317.0004	-	2	Screw, Truss Head #8-32 x .625"
27	28179.0000	-	1	Bracket, Term. Block Mounting
28	22289.0000	2	1	Decal, Control Panel (No Faucet, No Light)
	22289.0001	1	1	Decal, Control Panel (No Faucet, w/Ready Light)
	22289.0002	-	1	Decal, Control Panel (w/Faucet, No Light)
	22289.0003	1	1	Decal, Control Panel (w/Faucet, w/Ready Light)
	22289.0005	1	-	Decal, Control Panel (No Faucet, w/Fresh LED)
	22289.0006	1	1	Decal, Control Panel (w/Faucet, w/Fresh LED)
	22289.0012	1	-	Decal, Control Panel (No Faucet, w/Ready Light & Switch Cover)
	22289.0013	1	1	Decal, Control Panel (w/Faucet, w/Ready Light & Switch Cover)
29	04314.0001	2	1	Mechanical Thermostat Kit, w/Leads (Includes Knob & Grommet)
	28319.0000	2	1	Mechanical Thermostat Kit, w/o Leads (Includes Knob & Grommet)
	02308.0000	2	1	Screw, Pan Head #8-32 x .375"
	20762.0000	4	2	Terminal Screws, Brass #8-32 x .25"
30	07073.1000	2	1	Kit, Grommet, Thermostat (Includes 1ea, early/new style)
31	00720.0000	2	1	Knob
32	26527.1000	2	1	Electronic Thermostat Kit, 120V (Includes Grommet)
33	12570.0000	2	1	Grommet, Electronic Thermostat
34	12920.0000	#	#	Warmer Switch, 120V
	12920.0002	#	#	Warmer Switch, 240V
	27727.0001	#	#	Warmer Switch, 230V (A Models)
	20637.0000	-	1	½ Batch Switch (Single CW Only)
35	01063.0000	2	1	Start Switch, Momentary
	27904.0001	2	1	Start Switch, Momentary (A Models)
36	12921.0000	#	#	Switch Blank
	27691.0002	-	1	Ready Light (A Models Only)
37	22295.0000	-	1	Decal, Pour In (No Warmers)
	22295.0001	-	1	Decal, Pour In (One Top Warmer)
	22295.0002	-	1	Decal, Pour In (Three Lower Warmers)
	22295.0003	-	1	Decal, Pour In (One Top, Three Lower Warmers)
	22295.0004	2	1	Decal, Automatic (One Lower Warmer)
	22295.0005	2	1	Decal, Automatic (One Lower, One Top Warmer)
	22295.0006	2	1	Decal, Automatic (Three Lower Warmers)
	22295.0007	-	1	Decal, Automatic (One Top, Three Lower Warmers)
	22295.0010	2	1	Decal, Automatic (One Lower, Two Top Warmers)
	22295.0011	2	1	Decal, Automatic (No Warmwers) APS, TC, TS
	22295.0012	-	1	Decal, Pour In (One Lower, Two Top Warmers)
	28010.0000	-	1	Decal, Automatic (One Lower Warmer) (CE Only)
	28010.0001	-	1	Decal, Automatic (One Lower, One Top Warmer) (CE Only)
	28010.0002	-	1	Decal, Automatic (Three Lower Warmers) (CE Only)
	28010.0003	-	1	Decal, Automatic (One Lower, Two Top Warmers) (CE Only)
	28010.0004	-	1	Decal, Automatic (No Warmwers) APS, TC (CE Only)
	28010.0005	-	1	Decal, Pour In (No Warmers) (CE Only)
	20603.0001	-	1	Decal, Switches 1 Gal. - ½ Batch (Single CW Only)

Continued on next page

* Indicates the part number listed is for reference only.

ELECTRICAL AND OPERATING CONTROLS

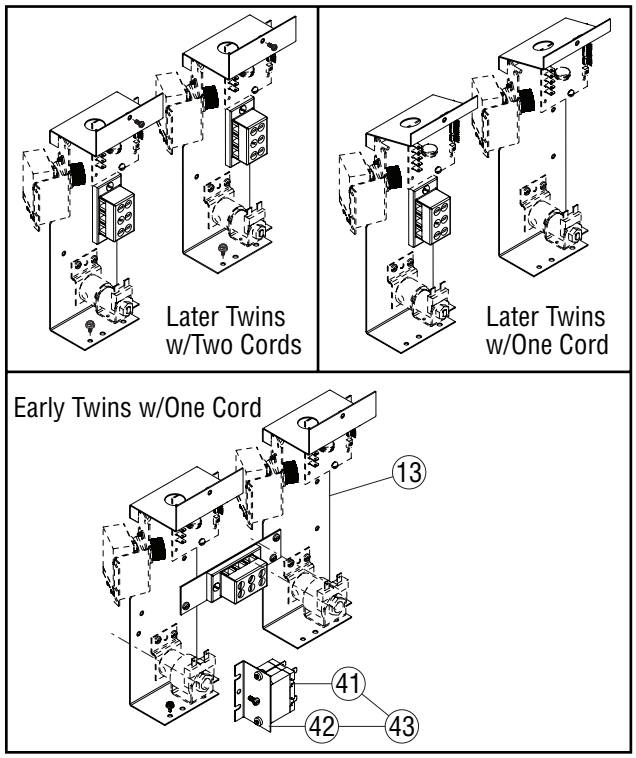

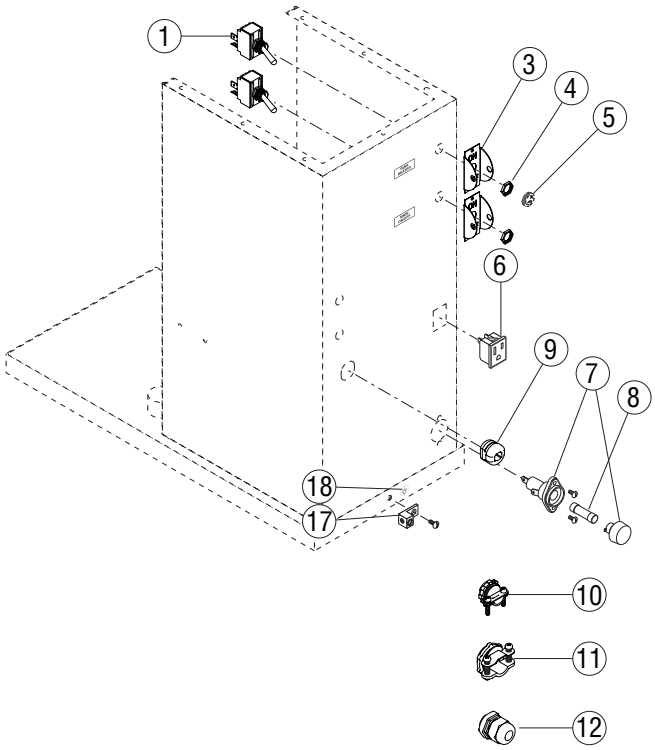

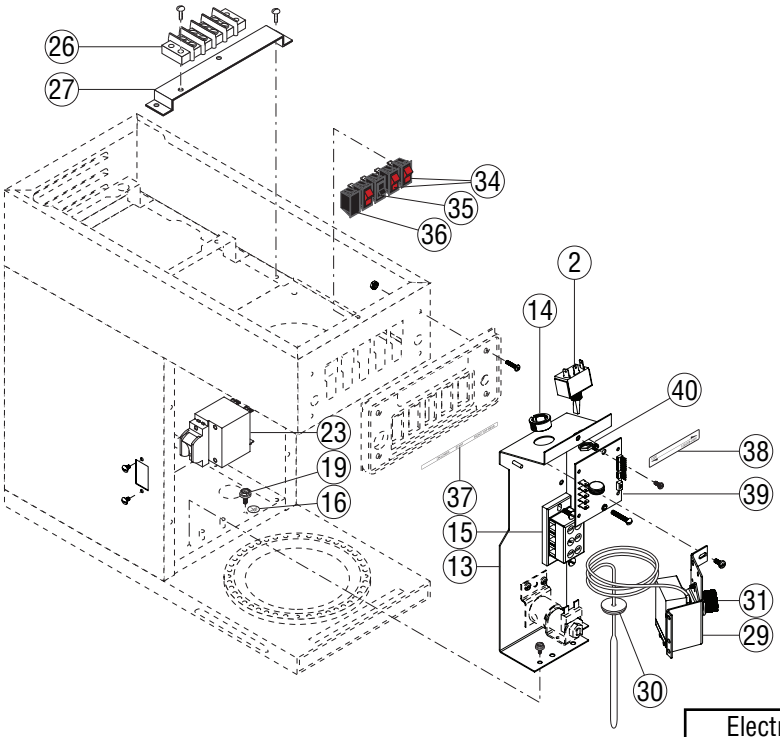

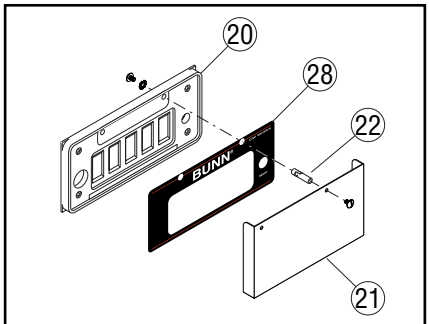

Brewers w/Switch Cover

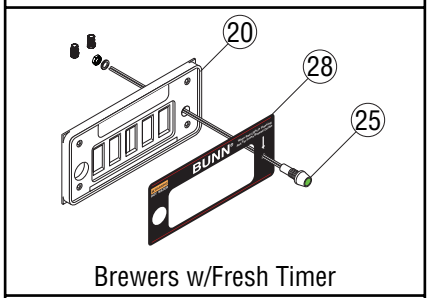

Brewers w/Fresh Timer

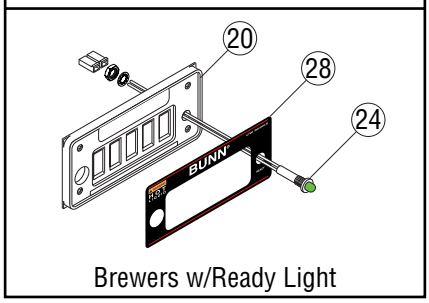

Brewers w/Ready Light

Electronic Thermostat

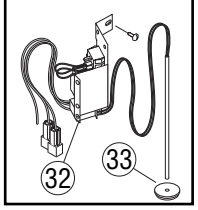

P3920.40

ELECTRICAL AND OPERATING CONTROLS

ITEM	PART NO.	QTY. TWIN	QTY. SINGLE	DESCRIPTION
38	34056.0000	-	1	Decal, Dual Volt
39	32400.0000	2	1	Digital Timer Kit, 120V
	32400.0001	2	1	Digital Timer Kit, 240V
	01320.0000	2	1	Screw, Round Head #8-32 x 1.0" (Late Models)
40	32530.0001	2	1	Spacer
41	37711.0000	2	1	Relay, 120V
	37711.0001	2	1	Relay, 240V
	02308.0000	4	2	Screw, Pan Head #8-32 x .375"
42	36256.0000	2	1	Bracket
	02308.0000	2	1	Screw, Pan Head #8-32 x .375"
43	38326.0000	2	1	Kit, Recovery Booster Relay w/Hardware 120V
	38326.0001	2	1	Kit, Recovery Booster Relay w/Hardware 240V
The Following Items Are Not Illustrated				
44	01719.1000	-	1	Power Cord, 120V 15A (Model 15 Only)
	23799.0001	-	1	Power Cord, 120V 20A (Model 20 Only)
	28111.0007	-	1	Power Cord, 230V 13A Plug (UK) CWA-APS
	27728.0011	-	1	Power Cord, 230V 16A (CE Only) CWTF35A No Plug
	32832.0000	1	-	Power Cord, 230V (CE Only) CWTFA Twin-APS No Plug
	33529.0002	-	1	Power Cord, 230V 10A Euro Plug (CE Only) CWA/CWTFA-APS
Models without Master ON/OFF Switch				
45	12985.0000	2	1	Wiring Harness, Thermostat to Ready Light (CWTF & Single CW)
	12985.0003	2	1	Wiring Harness, Thermostat to Ready Light (A Models)
46	25347.0000	2	1	Wiring Harness, Thermostat to Tank
47	29445.1000	2	1	Wiring Harness, Digital Timer Adaptor (Early Models)
48	27018.0000	2	1	Wiring Harness, Thermostat to Relay
	25907.0000	2	1	Lead Assembly, Black (Relay to Solenoid)
	25907.0001	2	1	Lead Assembly, White (Relay to Solenoid)
49	21002.1120	-	1	Lead Assembly, Blue (T. Stat. to Upper Term. Block) MV Models
50	28175.0000	-	1	Wiring Harness, (T. Stat. to Upper Term. Block) MV Models
51	24204.0000	1	-	Wiring Harness, Left Side Wrmr to 3 Pin Connector (Early 0/6 Twin) 120V
	24204.0001	1	-	Wiring Harness, Right Side Wrmr to 3 Pin Connector (Early 0/6 Twin) 240V
	23268.0000	1	-	Wiring Harness, Center Wrmrs to 3 Pin Connector (Early 0/6 Twin) 120V
	23268.0001	1	-	Wiring Harness, Center Wrmrs to 3 Pin Connector (Early 0/6 Twin) 240V
52	25326.0000	-	1	Wiring Harness, One Top Wrmr (Switches to 3 Pin Connector) 120V
	25326.0001	-	1	Wiring Harness, One Top Wrmr (Switches to 3 Pin Connector) 240V
53	23331.0002	-	1	Wiring Harness, Main APS/TC/TSR 240V & CE
54	23953.0000	1	-	Wiring Harness, Main 0/6 Twin 120/240V
55	23989.0000	1	-	Wiring Harness, Main 4/2, 2/2, 0/2 Twin-APS 120/240V
	23989.0001	1	-	Wiring Harness, Main 4/2 - 2/2 Twin 200V
56	23990.0000	1	-	Wiring Harness, Main 4/2, 2/2, Twin 230V (3 Phase)
	23990.0001	1	-	Wiring Harness, Main 2/2 Twin 240V & CE
57	25328.0001	-	1	Wiring Harness, Main (3 Warmers) 240V

Continued on next page

* Indicates the part number listed is for reference only.

ELECTRICAL AND OPERATING CONTROLS

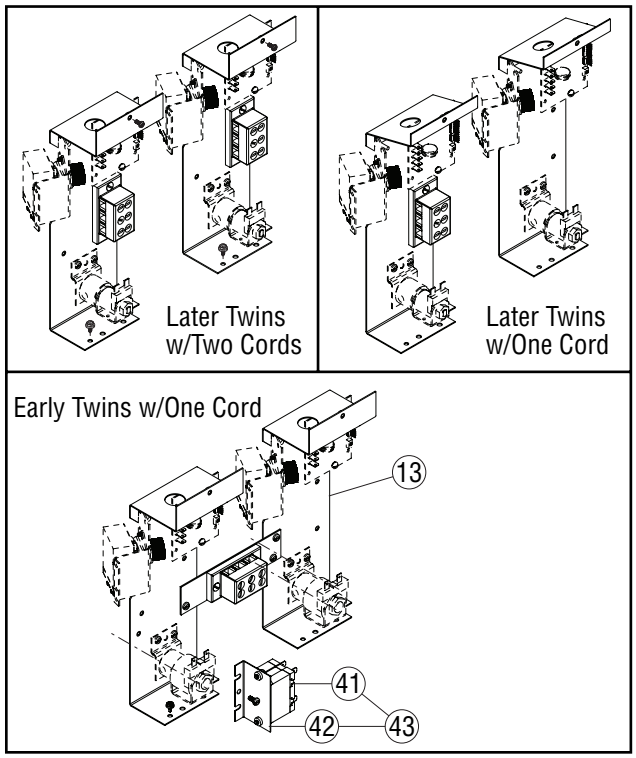

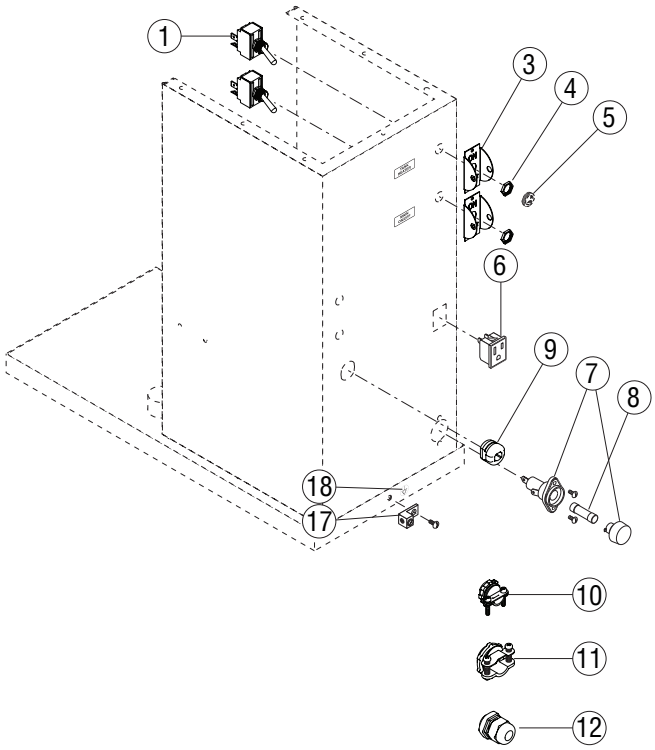

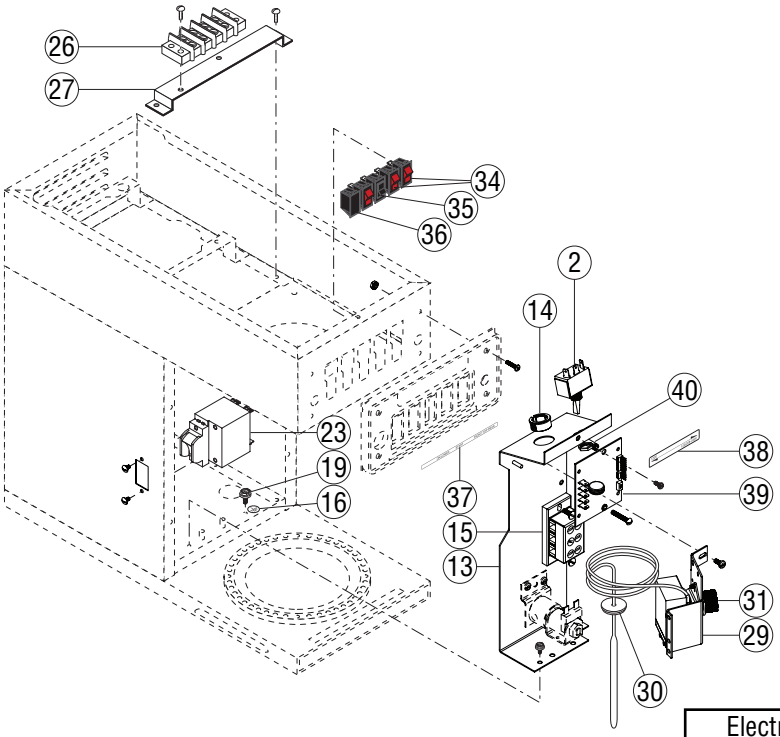

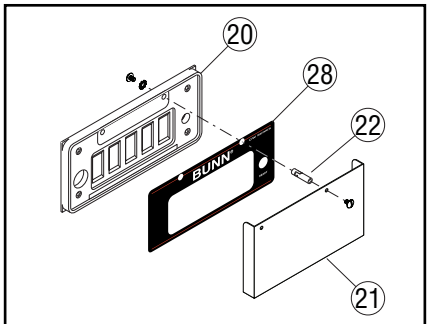

Brewers w/Switch Cover

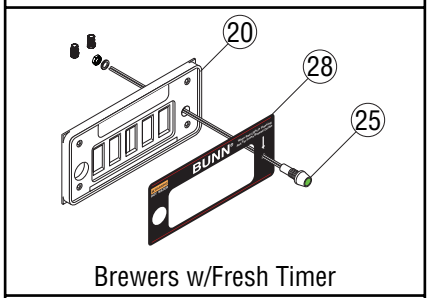

Brewers w/Fresh Timer

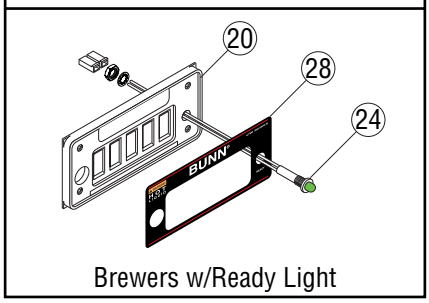

Brewers w/Ready Light

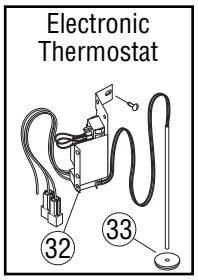

P3920.40

ELECTRICAL AND OPERATING CONTROLS

ITEM	PART NO.	QTY. TWIN	QTY. SINGLE	DESCRIPTION
58	25329.0000	-	1	Wiring Harness, Main (3L/NoUp) & (1L/2Up) 120/240V
	25329.0001	-	1	Wiring Harness, Main (1L/2Up) No Heater Switch 120/240V
	25329.0002	-	1	Wiring Harness, Main APS/TC 120/240V
59	27946.0000	-	1	Wiring Harness, Main (2 Warmers) 240V
60	28051.0000	-	1	Wiring Harness, Main APS/TC 240V & CE
61	33985.0000	-	1	Wiring Harness, Main (3 Warmers) 120V & Single CW-15
62	34005.0000	-	1	Wiring Harness, Main APS/TC (Pour In Only) 120V
63	34023.0000	-	1	Wiring Harness, Main (Single CW-15) 120/240V
	34023.0002	-	1	Wiring Harness, Main (4 Warmers) 120/240V
64	34023.0008	1	-	Wiring Harness, Main Twin-APS (CE) 230V
65	34026.0002	-	1	Wiring Harness, Main APS-DV
	34026.0003	-	1	Wiring Harness, Main APS 120/240V
66	34111.0000	-	1	Wiring Harness, Main (MV Models)
67	34981.0001	-	1	Wiring Harness, Main APS/TC 120V
68	34602.0000	-	1	Wiring Harness, Selector Switch (Single CW Only)
Models with ON/OFF Rocker Switch				
69	23331.0009	-	1	Wiring Harness, Main APS/TS 120V
70	23953.0003	1	-	Wiring Harness, Main 0/6 Twin 120/240V
71	23989.0004	1	-	Wiring Harness, Main Twin-APS 120/240V
	23989.0005	1	-	Wiring Harness, Main 2/2 Twin 120/240V
	23989.0006	1	-	Wiring Harness, Main 4/2 Twin 120/240V
72	28051.0001	-	1	Wiring Harness, Main APS/TC 240V
73	38920.0000	-	1	Wiring Harness, Switch to Terminal Block 240V
	38920.0010	(1)	-	Wiring Harness, Switch to Terminal Block 240V (1 Per Power Cord)
	38920.0004	-	1	Wiring Harness, Switch to Terminal Block 120V
74	34023.0004	2	-	Wiring Harness, Main 0/6 Twin (2 Power Cords)
75	34023.0005	-	1	Wiring Harness, Main (3 Lower Warmers) 120/240V
76	34023.0006	-	1	Wiring Harness, Main (1 Lower, 2 Top Warmers) 120/240V & Sngl CW-35
77	34023.0007	-	1	Wiring Harness, Main (1 Top, 3 Lower Warmers) 120/240V
Models with ON/OFF Toggle Switch				
78	41390.0009	-	1	WIRING HARN, Main CWTF -35 3 lwr
79	41390.0010	-	1	WIRING HARN, Main CWTF -20 3 lwr
80	41390.0011	-	1	WIRING HARN, Main CWTF -35 1 lwr/2 upr & SINGLE CWTF35 1 lwr
81	41390.0012	-	1	WIRING HARN, Main CWTF -35 3 lwr left
82	41390.0014	-	1	WIRING HARN, Main CWTF-20 1 lwr/2 upr
83	41390.0015	-	1	WIRING HARN, Main CWTF-35 TC
84	41390.0016	-	1	WIRING HARN, Main CWTF-20 TC/APS

Continued on next page

* Indicates the part number listed is for reference only.

ELECTRICAL AND OPERATING CONTROLS

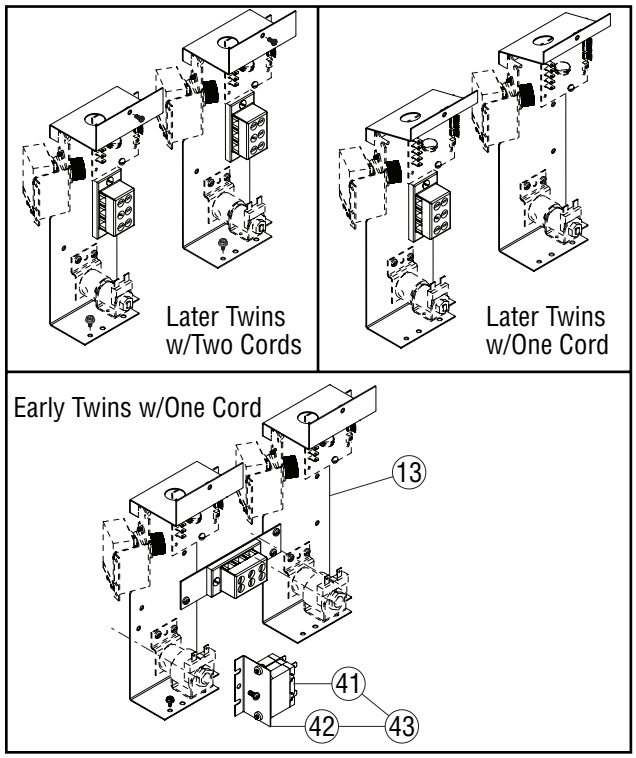

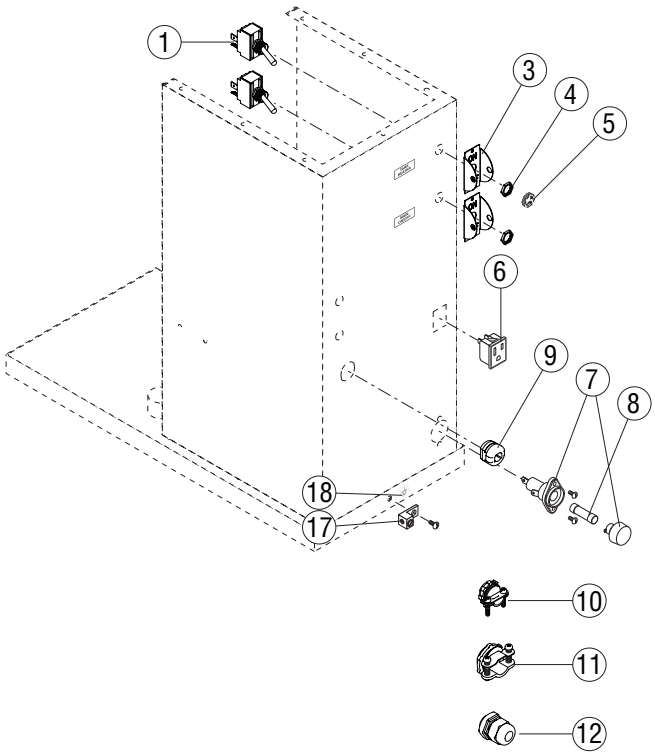

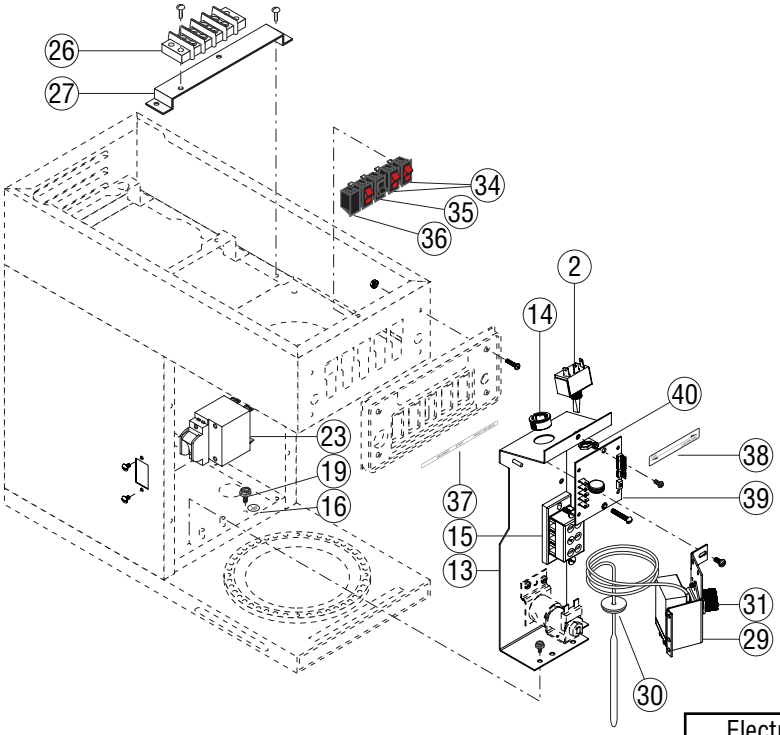

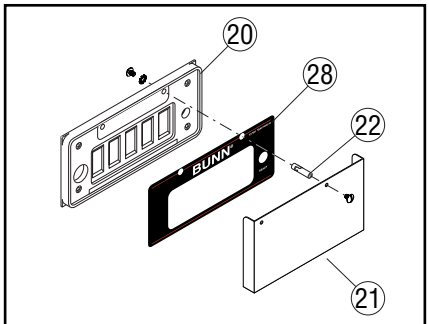

Brewers w/Switch Cover

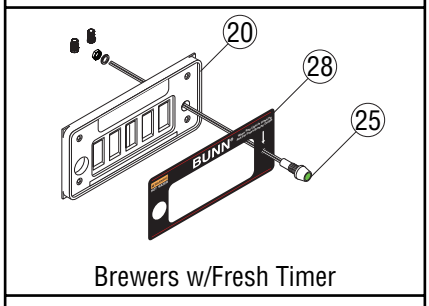

Brewers w/Fresh Timer

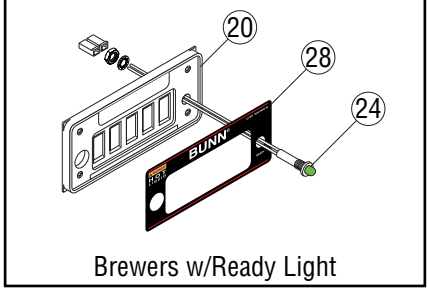

Brewers w/Ready Light

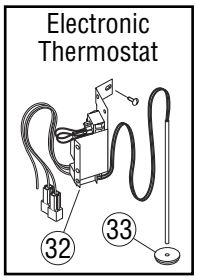

P3920.40

ITEM	PART NO.	QTY. TWIN	QTY. SINGLE	DESCRIPTION
85	41390.0017	-	1	WIRING HARN, Main CWTF–DV 1 lwr/2 upr
86	41390.0018	-	1	WIRING HARN, Main CWTF–DV 3 lwr
87	41390.0019	-	1	WIRING HARN, Main CWTF–DV 1 lwr
88	41390.0020	-	1	WIRING HARN, Main CWTF-35 TS/APS
89	41390.0021	-	1	WIRING HARN, Main CWTF-20 TS/APS
90	41390.0022	-	1	WIRING HARN, Main CWTF – APS 230v CE
91	41390.0023	-	1	WIRING HARN, Main CW-20 APS
92	41390.0024	-	1	WIRING HARN, Main CWTF -DV TC/APS
93	41390.0028	-	1	WIRING HARN, Main CWTF35A 230V 3LOWER/1UPPER
94	34023.0009	2	-	Wiring Harness, Main 0/6 Twin (2 Power Cords)
95	40081.0003	2	-	Wiring Harness, Switch to Term Block 0/6 Twin (2 Power Cords)
Harnesses from Upper Warmers to the 3 pin connector				
96	02812.0001	-	1	WIRING HARN, Standard 2 Wmr, 2 Switches 120V
	12922.0002	-	1	WIRING HARN, Standard 2 Wmr, 2 Switches 240V
	25348.0003	-	1	WIRING HARN, 2 Wmr, 1 Switch 120V (CK Only)
97	25348.0000	-	1	WIRING HARN, 1 Wmr, (Rear) 2 Switches 120V
	25348.0001	-	1	WIRING HARN, 1 Wmr, (Rear) 2 Switches 240V
	25348.0002	-	1	WIRING HARN, 1 Wmr, (Front) 2 Switches 120V
98	23950.0000	1	-	WIRING HARN, 2 Wmr, (Rear) 2 Switches 120V (2/2 Twin Only)
	23950.0001	1	-	WIRING HARN, 2 Wmr, (Rear) 2 Switches 240V (2/2 Twin Only)
	23950.0002	1	-	WIRING HARN, 2 Wmr, (Front) 2 Switches 120V (2/2 Twin Only)
99	23949.0000	1	-	WIRING HARN, 4 Wmr, 4 Switches 120V (4/2 Twin Only)
	23949.0001	1	-	WIRING HARN, 4 Wmr, 4 Switches 240V (4/2 Twin Only)

* Indicates the part number listed is for reference only.

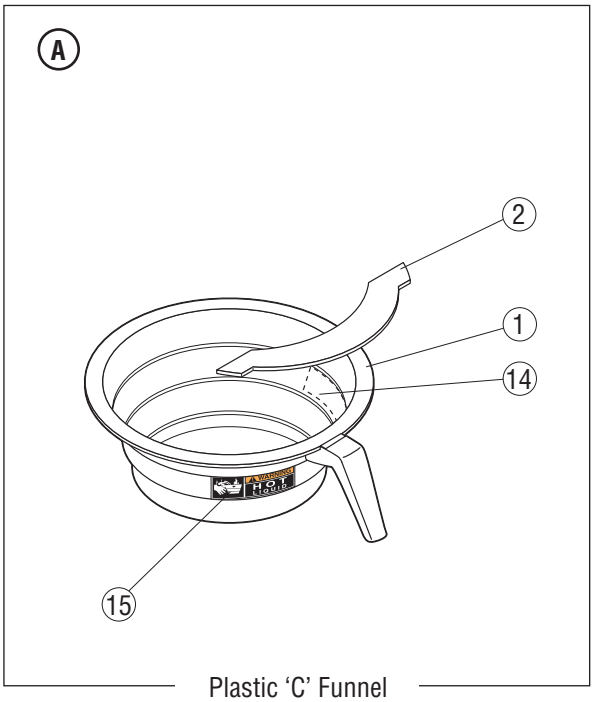

Plastic ‘C’ Funnel

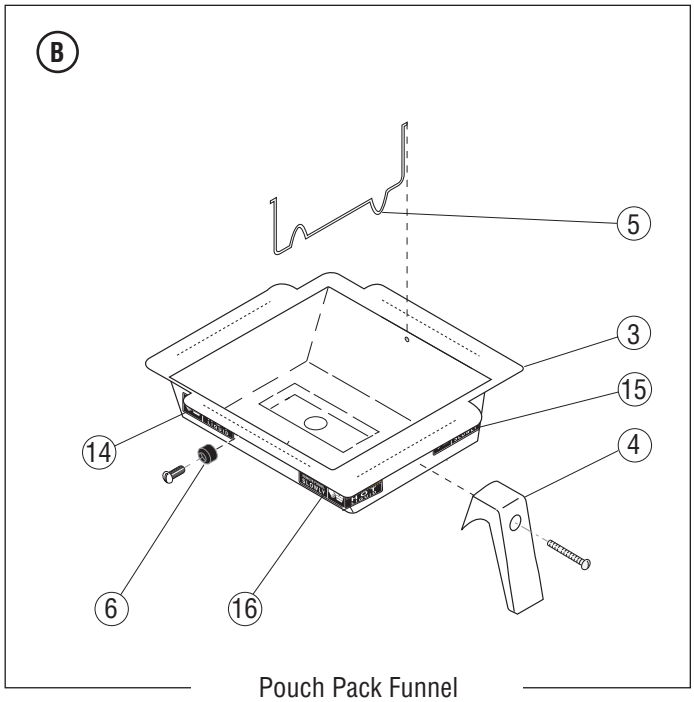

Pouch Pack Funnel

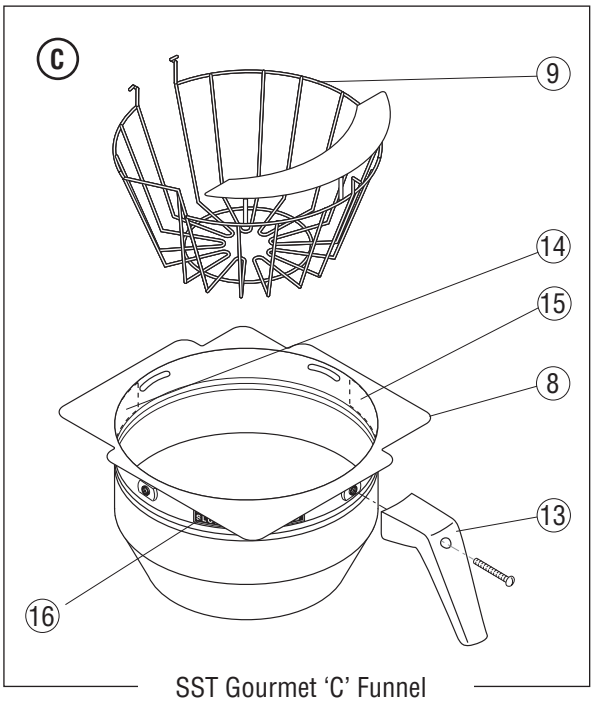

SST Gourmet ‘C’ Funnel

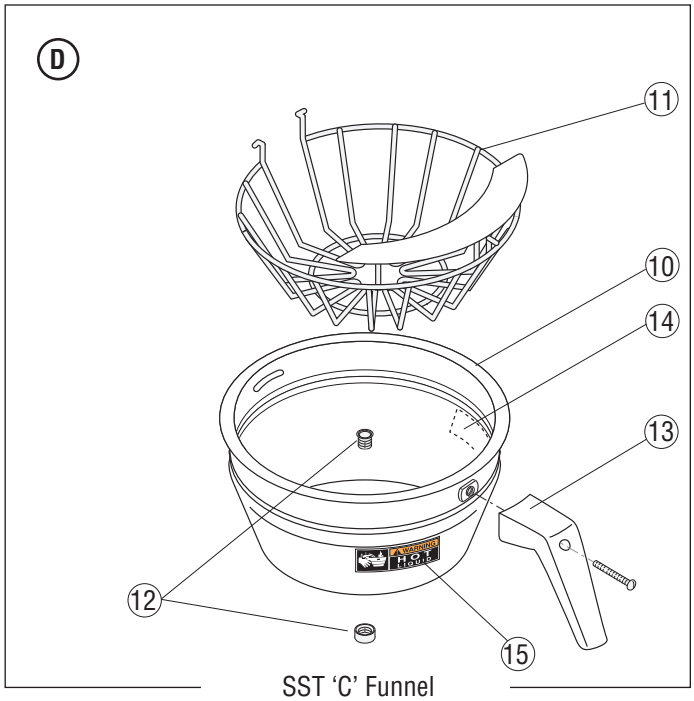

SST ‘C’ Funnel

P3703

FUNNELS

ITEM	PART NO.	QTY. TWIN	QTY. SINGLE	DESCRIPTION
A	20583.0002	-	1	Funnel Assy, Smoke Plastic (Includes items 2, 14, & 15)
	20583.0003	-	1	Funnel Assy, Black Plastic (Includes items 2, 14, & 15)
	20583.0006	-	1	Funnel Assy, Orange Plastic (Includes items 2, 14, & 15)
1	33119.0000*	-	1	Funnel Body, Black Plastic (Order item **A**)
1	33127.0000*	-	1	Funnel Body, Orange Plastic (Order item **A**)
2	32964.0000	-	1	Splashgard, Black Plastic
B	29151.0000	2	1	Funnel Assy, Pouch Pack Blk Handle (Includes items 3-6 & 14-16)
	29151.0001	2	1	Funnel Assy, Pouch Pack Orn Handle (Includes items 3-6 & 14-16)
	04274.0010	2	1	Funnel Assy, Pouch Pack Brown Plastic (Includes item 16)
	04274.0012	2	1	Funnel Assy, Pouch Pack Black Plastic (Includes item 16)
3	29150.0000*	2	1	Funnel Body, Pouch Pack 'C Series' SST (Order item **B**)
4	29152.1000	2	1	Handle Kit, Pouch Pack, Black (Includes mounting screw below)
	29152.1001	2	1	Handle Kit, Pouch Pack, Orange (Includes mounting screw below)
	01331.0002	2	1	Screw, Round Head 10-32 x 1.5"
5	29845.0000	2	1	Insert, Pouch Pack Funnel
6	35302.0000	2	1	Keeper, Insert
	01331.0000	2	1	Screw, Round Head 10-32 x .5"
C	34559.0000	-	1	Funnel Assy, Gourmet SST (Includes items 8, 9, & 13-16)
8	34558.0000*	2	1	Funnel Body, Gourmet SST (Order item **C**)
9	34546.0000	2	1	Filter Basket, Gourmet 'C'
D	20216.0000	-	1	Funnel Assy, 7.12" SST Blk Handle (Includes items 10, 11 & 13-16)
	20216.0001	-	1	Funnel Assy, 7.12" SST Orn Handle (Includes items 10, 11 & 13-16)
	20217.0000	2	-	Funnel Assy, 7.62" SST Blk Handle (Includes items 10, 11 & 13-16)
	20217.0001	2	-	Funnel Assy, 7.62" SST Orn Handle (Includes items 10, 11 & 13-16)
10	28553.0000	-	1	Funnel Body, W/Decals, 7.12" SST (Includes items 14 & 15)
	28554.0000	2	1	Funnel Body, W/Decals, 7.62" SST (Includes items 14 & 15)
11	33088.0000	-	1	Filter Basket, 7.12" SST
	33090.0000	2	1	Filter Basket, 7.62" SST
12	01031.0000	2	1	Funnel Tip Kit
13	20244.1000	2	1	Handle Kit, Black (Includes mounting screw below)
	20244.1001	2	1	Handle Kit, Orange (Includes mounting screw below)
	01331.0002	2	1	Screw, Round Head 10-32 x 1.5"
14	03408.0002	2	1	Decal, Warning - Remove Funnel
15	03409.0002	2	1	Decal, Warning - Hot Liquid
16	28694.0000	2	1	Decal, Warning - Hot Liquid/Remove Funnel

D does not include tip kit

Note

* Indicates the part number listed is for reference only.

NUMERICAL INDEX

PART NO.	PAGE NO.
00310.0000	33,35
00310.0002	35
00400.0001	21
00402.0001	25,37
00419.0000	25
00425.1000	25
00436.0001	27
00445.0001	35
00459.0000	27,29,33
00459.0001	31
00462.0001	9
00463.0000	27,29,39
00463.0000	31,33
00484.0001	35
00511.1000	19
00606.0000	43
00656.0001	13
00658.0000	13
00669.0003	9,13,31
00720.0000	45
00754.0001	17
00824.0001	43
00824.0002	43
00831.0000	13
00833.0000	5
00908.0000	5,21
00912.0000	5,9,21
00916.0000	5,9,41
00942.0000	21
00943.0000	21
00970.0000	11,41
00971.0000	5,7
00973.0000	43
00973.0000	9
00988.0000	11
01031.0000	53
01063.0000	45
01075.0000	21
01079.0000	37
01082.0000	23
01082.0004	23
01082.0005	23
01082.0007	23
01082.1000	23
01085.0000	37
01085.0002	37
01100.0000	37
01101.0000	37
01106.0000	43
01106.0001	43
01106.0003	43
01111.0000	37
01111.0002	37
01116.0000	37
01148.0000	35
01148.0001	35
01154.0000	29,33,35
01155.0000	29,33,35
01200.0000	25
01201.0000	25
01212.0000	25
01212.0001	25
01227.0000	41
01303.0000	5,9,41
01303.0002	5
01308.0000	43
01308.0002	15,43
01308.0003	15
01309.0000	43
01315.0000	5,9
01315.0000	13,21
01315.0005	13
01317.0000	43
01317.0004	45
01319.0000	5
01320.0000	47
01326.0007	5,7
01327.0000	37
01327.0000	43
01331.0000	53
01331.0002	53
01347.0000	7,19
01382.0000	13
01382.0002	13
01426.0000	25
01502.0000	37
01510.0000	43
01532.0000	27,29,31
01532.0000	33,39
01590.0000	43
01592.0000	5,15,17
01592.0001	5
01593.0000	17
01685.0000	43
01686.0000	43
01719.1000	47
01925.1000	21
01927.0000	21
01951.0000	41
01951.0001	41
01975.0000	37
02301.0000	43
02308.0000	9,11,13
02308.0000	17,19,37
02308.0000	43,45,47
02332.0001	43
02332.0002	5,11
02332.0002	17,19
02337.0001	43
02371.0000	9
02722.0000	5
02722.0001	5
02732.0000	5
02763.0000	5
02765.0000	5
02812.0001	51
02822.0000	13
02858.0000	39
02999.0000	5
03070.1001	21
03263.0002	9
03408.0002	53
03409.0002	53
03628.0000	43
03652.0000	41
03656.0000	41
03851.0000	45
03993.0000	19
03996.0000	19
04118.0000	21
04119.0000	23
04133.0000	23
04221.0000	21
04236.1000	21
04243.0000	45
04260.0000	21
04270.0000	25
04270.0002	25
04274.0010	53
04274.0012	53
04314.0001	45
04572.0000	35
04636.1000	21
04637.1000	21
04776.0000	23
04828.0001	41
04828.1001	41
04831.0000	5
05212.0000	41
05515.0000	21
05518.0000	21
05746.1000	43
07038.0000	43
07073.1000	45
07441.0000	37
10165.0000	15
10447.0000	15
10693.0000	13
10693.0001	13
10693.0002	13
10736.0000	13
10836.0000	13
10836.0005	13
10836.0009	13
10836.0010	13
10836.0011	13
10847.0000	13
10867.0000	13
11408.1002	13
11408.1005	13
11408.1006	13
11424.0000	25
11431.0002	21
11438.0000	41
11438.0001	41
11440.0005	41
11440.0008	41
11440.0009	41
11440.0010	41
11440.0011	41
11442.0000	41
11707.0003	25
11707.1000	25
11707.1001	25
11707.1002	25
12104.0000	15
12148.0000	43
12183.0002	13
12364.0000	17
12364.0000	7
12422.0000	25
12422.0001	37
12517.0003	45
12570.0000	45
12667.0001	17
12683.0000	9
12683.0002	9
12687.0000	21
12688.0000	21
12689.1000	21
12698.0003	43
12698.0004	43
12698.0005	43
12908.0000	35
12909.0000	35
12913.0000	25
12914.0002	25
12915.0000	39
12920.0000	45
12920.0002	45
12921.0000	17,45
12922.0002	51
12928.0000	25
12978.0000	5
12981.0001	5
12985.0000	47

12985.0003 47
13042.0001 41
13053.0000 39
13054.0000 39
13055.0000 39
13056.0000 39
13057.0000 39
13058.1000 39
13060.0000 39
13061.0000 39
13110.0000 5
13255.0005 19
13350.0006 9
13350.0008 9
13350.0011 9
13350.0016 9
13352.0008 43
13352.0011 43
20201.0750 21
20201.3000 21
20211.0100 21,23
20216.0000 53
20216.0001 53
20217.0000 53
20217.0001 53
20244.1000 53
20244.1001 53
20526.1222 29,33,35
20527.0001 35
20528.1222 35
20577.0001 29,31,33
20583.0002 53
20583.0003 53
20583.0006 53
20603.0001 45
20637.0000 45
20690.0000 31,33,35
20690.0003 31
20691.0000 39
20691.0001 39
20762.0000 45
20782.1000 35
20783.0000 35
20784.0000 35
20785.0000 35
20786.1000 35
20941.1000 21
20976.0006 37
20976.1000 37
20976.1001 37
20976.1002 37
21002.1120 47
21016.0011 41
21016.0012 41
21016.0027 41
21104.0003 19
21180.0000 37
21181.0000 37
21812.0002 35
21812.1006 35
21814.0011 29
21814.0016 31,33
22012.0002 43
22249.0000 29,33,35
22289.0000 45
22289.0001 45
22289.0002 45
22289.0003 45
22289.0005 45
22289.0006 45
22289.0012 45
22289.0013 45
22295.0000 45
22295.0001 45
22295.0002 45
22295.0003 45
22295.0004 45
22295.0005 45
22295.0006 45
22295.0007 45
22295.0010 45
22295.0011 45
22295.0012 45
22300.0222 29,33,35
22306.0000 17
22312.0000 29,33,35
22312.0001 35
22397.0001 25,37
22730.1002 13
22730.1003 13
22730.1005 13
22730.1007 13
22730.1009 13
22733.0000 11
22740.0000 17
22748.0000 11
22748.0001 11
22748.0002 11
22918.0000 23
22918.0001 23
22999.0000 17
23232.0000 9
23232.0002 9
23232.0004 9
23232.0005 9
23267.1000 13
23267.1001 13
23268.0000 47
23268.0001 47
23270.0000 11
23294.0000 11
23294.0001 11
23294.0002 11
23294.0008 11
23294.0011 11
23294.1010 11
23294.1015 11
23320.1004 11
23320.1012 11
23321.0000 17
23321.0001 17
23321.0002 17
23321.0003 17
23321.0004 17
23329.0000 19
23331.0002 47
23331.0009 49
23413.0000 27,29
23522.1001 43
23696.0000 43
23697.0000 43
23698.1002 17
23698.1003 17
23698.1004 17
23698.1005 17
23721.0000 29,33,35
23768.0000 21
23769.0000 21
23799.0001 47
23819.0000 35
23820.1000 35
23924.0000 29
23925.0000 29
23929.1000 21
23930.1000 21
23949.0000 51
23949.0001 51
23950.0000 51
23950.0001 51
23950.0002 51
23953.0000 47
23953.0003 49
23989.0000 47
23989.0001 47
23989.0004 49
23989.0005 49
23989.0006 49
23990.0000 47
23990.0001 47
24204.0000 47
24204.0001 47
24213.0000 15
24217.1000 21
24220.0000 29
24230.0000 19
24249.0003 13
24253.0000 19
24253.0001 19
24253.0002 19
24253.0003 19
24254.0000 7
24254.0001 7
24254.0002 7
24356.0222 33
24393.0000 35
24394.0222 33
24540.0000 15
24600.0000 17
24684.0000 29
24785.0002 41
24805.0000 17
24805.0002 17
25102.0000 43
25102.0001 43
25137.0000 17
25137.0001 17
25158.0000 21
25158.0001 21
25158.0002 21
25158.0004 21
25292.0000 45
25319.1000 23
25319.1001 23
25319.1002 23
25319.1010 23
25320.1000 23
25320.1001 23
25320.1002 23
25320.1007 23
25320.1012 23
25320.1017 23
25326.0000 47
25326.0001 47
25328.0001 47
25329.0000 49
25329.0001 49
25329.0002 49
25347.0000 47
25348.0000 51
25348.0001 51
25348.0002 51
25348.0003 51
25351.0000 17
25351.0001 17
25351.0002 17
25352.0007 11

NUMERICAL INDEX

PART NO.	PAGE NO.
25633.0002	5
25657.0000	17
25657.0001	17
25657.0002	17
25658.0000	17
25658.0002	17
25864.0000	7
25907.0000	47
25907.0001	47
26216.0000	33
26217.0000	33
26225.0000	15
26283.1000	13
26283.1001	13
26285.0000	11
26285.0001	11
26285.0002	11
26285.0006	11
26285.0007	11
26285.0008	11
26287.0000	11
26301.0000	29
26318.0000	29
26413.0000	17
26413.0001	17
26443.0001	37
26527.1000	45
26528.0001	19
26953.0000	17
27018.0000	47
27429.0000	43
27429.0002	43
27514.0000	25
27623.0000	19
27691.0002	45
27693.0000	13
27705.0000	43
27727.0001	45
27728.0011	47
27904.0001	45
27929.0000	13
27946.0000	49
28004.0000	43
28005.0000	37
28010.0000	45
28010.0001	45
28010.0002	45
28010.0003	45
28010.0004	45
28010.0005	45
28020.0000	37
28021.0000	37
28051.0000	49
28051.0001	49
28111.0007	47
28173.0000	23
28174.0000	23
28175.0000	47
28176.0000	43
28177.0000	45
28179.0000	45
28180.0000	5
28181.0000	13
28181.0001	13
28181.0002	13
28233.0000	11
28242.0000	23
28319.0000	45
28479.0000	37
28480.0000	37
28481.0000	37
28526.0021	25
28526.1000	25
28526.1001	25
28526.1002	25
28526.1003	25
28553.0000	53
28554.0000	53
28694.0000	53
29150.0000	53
29151.0000	53
29151.0001	53
29152.1000	53
29152.1001	53
29329.1000	21
29351.0001	53
29445.1000	47
29845.0000	53
32063.0000	25
32283.0000	37
32400.0000	47
32400.0001	47
32530.0001	47
32540.0000	13
32832.0000	47
32964.0000	53
32966.0000	53
33088.0000	53
33090.0000	53
33119.0000	53
33127.0000	53
33529.0002	47
33637.0000	29
33643.0000	27,29
33985.0000	49
34005.0000	49
34023.0000	49
34023.0002	49
34023.0004	49
34023.0005	49
34023.0006	49
34023.0007	49
34023.0008	49
34023.0009	51
34026.0002	49
34026.0003	49
34056.0000	47
34061.0013	11
34061.0026	11
34061.1000	11
34061.1003	11
34061.1004	11
34061.1006	11
34061.1022	11
34061.1023	11
34061.1025	11
34061.1035	11
34065.1001	19
34111.0000	49
34130.0000	45
34208.1002	11
34208.1011	11
34546.0000	53
34558.0000	53
34559.0000	53
34559.0001	53
34602.0000	49
34955.0000	13
34955.0001	13
34955.0002	13
34955.0003	13
34981.0001	49
35129.0000	39
35302.0000	53
35712.0000	17
36256.0000	47
37297.1002	31
37297.1005	31
37711.0000	47
37711.0001	47
37881.0000	5,7,13
37881.0002	5,7
38326.0000	47
38326.0001	47
38496.1000	5
38496.1002	5
38498.1000	5,7
38503.1000	5
38504.1000	5
38707.1000	7
38707.1001	7
38707.1002	7
38707.1003	7
38820.0000	15
38894.0001	43
38920.0000	49
38920.0004	49
38920.0010	49
39806.0000	15
40081.0003	51
40085.1000	5
40124.0000	15
40763.0001	43
41252.0000	31,33
41252.0001	31
41254.0000	31
41255.0002	37
41255.0003	37
41256.0000	37
41257.0000	31
41267.0000	27
41268.0000	27
41281.0000	27,29
41390.0009	49
41390.0010	49
41390.0011	49
41390.0012	49
41390.0014	49
41390.0015	49
41390.0016	49
41390.0017	51
41390.0018	51
41390.0019	51
41390.0020	51
41390.0021	51
41390.0022	51
41390.0023	51
41390.0024	51
41390.0028	51
41402.1000	11
41402.1001	11
41402.1003	11
41402.1008	11
41405.0000	15
41417.1000	11
41417.1001	11
41417.1002	11
41426.1000	11
41427.0000	15
41760.0000	5,7
41935.0000	37
41935.0001	37
42025.0000	37
42025.0001	37
46884.0000	37
47575.1000	45

47575.1001..... 45