WILBUR CURTIS COMPANY, INC.

Service Manual – Iced Tea & Combo Brewer

Models Included:
- TCTS/T
- PTT3

Starting on Page 7:
- CBS
- CBP

Important Safeguards/Symbols

This appliance is designed for commercial use. Any servicing other than cleaning and preventive maintenance should be performed by an authorized Wilbur Curtis service technician.

- *Do NOT immerse the unit in water or any other liquid*
- *To reduce the risk of fire or electric shock, do NOT open service panels. No user serviceable parts inside.*
- *Keep hands and other items away from hot surfaces of unit during operation.*
- *Never clean with scouring powders, bleach or harsh chemicals.*

Symbols

WARNINGS – To help avoid personal injury

Important Notes/Cautions – from the factory

Sanitation Requirements

The Curtis G3 Brewer is Factory Pre-Set and Ready to Go… Right from the Box.

Following are the Factory Settings for the G3 Iced Tea Brewer.

- *Brew Temperature = 204°F*
- *Brew Volume = Set to dispensing vessel requirements*

Generally there will never be a reason to change the G3/Gold Cup Series default settings. However, should you need to make slight adjustments to meet your brewing needs, programming instructions are provided later in this manual.

System Requirements:

- *Water Source 20 – 90 PSI. Minimum flow rate of ½ gpm (1 gpm preferred flow rate).*
- *Electrical: See electrical schematic on page 6.*

CAUTION: Equipment must be installed to comply with applicable federal, state, and local plumbing/ electrical codes having jurisdiction.

CAUTION: Follow this setup procedure before attempting to use this unit. Failure to follow these instructions can result in injury and/or void of warranty.

CAUTION: DO NOT connect the unit to hot water. The inlet valve is not rated for hot water.

IMPORTANT: After setup, run a FULL brewcycle. Place a tea container to catch both hot water from the brewcone and dilution water from spout on the front cover.

WARNING HOT LIQUID, Scalding may occur. Avoid splashing.

SETUP STEPS

The unit should be level (left to right and front to back), and located on a secure counter top. Connect a water line from the water filter to the brewer.

NOTE: A water filtration device must be used to maintain a trouble-free operation. (In areas with extremely hard water, we suggest that a sedimentary and taste & odor filter be installed.) This will prolong the life of your brewing system and enhance coffee quality.

NSF International requires the following water connection:
1. A quick disconnect or additional coiled tubing (at least 2x the depth of the unit) so that the machine can be moved for cleaning underneath.
2. In some areas an approved backflow prevention device may be required between the brewer and the water supply.
3. Water pipe connections and fixtures directly connected to a potable water supply shall be sized, installed and maintained in accordance with federal, state, and local codes.

1. *A 1/4" Flare has been supplied for water line connection. Use tubing sized sufficiently to provide ½ GPM (preferred flow rate is 1gpm).*
2. *Connect the unit to an appropriate electrical power circuit.*
3. *Turn on the toggle (STANDBY/ON) switch behind the unit. The heating tank will start to fill. When the water level in the tank rises to the correct volume, the heating element will energize automatically. With G3 tea brewers there is no danger of element burnout caused by an empty tank.*
4. *The heating tank will require 20 to 30 minutes to reach operating temperature (204°F) as indicated by the READY-TO-BREW LCD readout.*
5. *Important: Run one full brewcycle, to purge the water lines and valves of air. Five seconds of dilution water at the beginning of each brewcycle is normal pre-programmed operating behavior.*

BREWING INSTRUCTIONS

1. *Brewer should be ON (Confirm at rear toggle switch, then press ON/OFF button) and Ready-to-Brew displayed.*

2. *Place filter in brew basket. Pour leaf tea into basket.*

3. *Slide brew cone into brew rails. Place tea container under brew cone.*

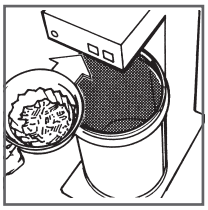

4. *Press the BREW button to brew tea.*

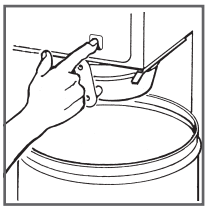

ISO 9001:2008 REGISTERED

WILBUR CURTIS CO.
Montebello, CA 90640
For the latest information go to
www.wilburcurtis.com
Tel: 800/421-6150

Quick Start

TCT & PTT

Your Curtis Generation 3 Brewer is Factory Pre-Set for Optimum Performance.
After connection to water and power; the rear toggle switch must be on. You will hear a beep sound, indicating power is available to the controller.

The control displays [CURTIS]. *Press ON/OFF button and the screen will display* [< TCT > CURTIS]. *After three seconds,* [CURTIS FILLING] *is displayed.*

Water will fill the tank (approximately 2-3 minutes depending on water flow rate). When the proper level is reached [CURTIS HEATING] *will appear on the screen. It takes approximately 20 minutes to reach set point temperature of 204°F.*

Control will display [CURTIS READY to BREW] *when temperature reaches the set point (204°F). Unit is now ready to brew.*

To Go Into Programming

Turn off (dark display) by pressing ON/OFF button (yellow). Press and hold BREW button (4) (green) and then press and release ON/OFF button (yellow).

Continue holding BREW button. Display will read [ENTERING PROGRAM MODE], *wait until* [ENTER CODE _ _ _ _] *is displayed Enter the 4-digit access code, the digits 1-4 correspond to the buttons (see illustration below).*
The default code set at the factory is 1-2-3-4. Then [PROGRAM MENUS < SELECT >] *will be displayed.*

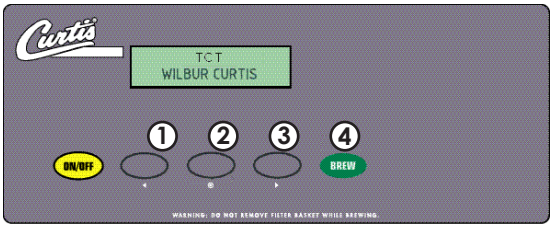

All programming selections are performed with the three center buttons.
The symbols below the buttons are:

- ◁ *Scroll LEFT*
- ⊙ *SELECTION or ENTER to save new parameter*
- ▷ *Scroll RIGHT*

GRAY

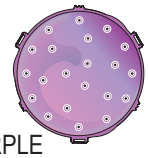
PURPLE

IMPORTANT

SPRAYHEADS: Mentioned in this Programming guide are the words Gray and Purple. This refers to the color of the sprayhead. The current sprayhead is the purple AFS. The older version is the gray sprayhead. See the illustration at right.

Program Menus

Program Menus → Tea Recipes → Tea By Volume * → Tea By Time * → Tea Dilut Delay * → Tea Dilut Volume * → Tea Dilut Time *

Program Menus *screen. Press > button, to show the next menu item.*

Tea Recipes *(Factory set to Standard Tea Purple)*
Press ⊙ to Select. Press < or > to scroll through recipes: Standard Gray, Standard Purple, Tropical Gray, Tropical Purple, 76/308 Gray or 76/308 Purple. Press ⊙ to set.

Tea by Volume: *Press ⊙ to select, Display will now show Push START To Begin... Press the BREW button then hot water starts running, when desired volume is reached press BREW button again to stop the flow. Now the volume has been set. Pressing > button will display the subsequent menu features.*

Tea by Time *(Factory set to 5:52)*
Press ⊙ to select. By pressing < or > buttons, you can increase and decrease time. Press ⊙ to set minutes and seconds. Units with the half batch option, the Half Batch brew button is factory set at for half the brew time (2:56).

Tea Dilution Delay *(Factory set to 0:30)*
Press ⊙ to Select. Press < or > buttons, to add or decrease time. Press ⊙ to set.

Tea Dilution Volume: *Press ⊙ to Select, Display will now show Push START To Begin... Press the BREW button and water will flow, when desired volume is reached press BREW button again to stop the flow. Now the volume has been set. Press > to display subsequent menu features.*

Dilution Time *(Factory set to 4:05)*
Press ⊙ to Select. By pressing < or > buttons, you can increase and decrease time. Press ⊙ to set minutes and seconds.

* *On units with the* ***half batch option****, the half batch brew button may be independently set.*

Continued on Page 3

Tea Dilut Stir

Tea Dilution Stir *(Factory set to ON).*
Press ⦿ to Select. Press < or > buttons, to toggle between OFF and ON. Press ⦿ to set.

Tea Pulse Brew

Tea Pulse Brew *(Factory set to OFF).*
Press ⦿ to Select. Press < or > to select ON, OFF or D. D is a manual adjust from 1 to 20 pulses with an ON time from 5 to 150 seconds and an OFF time from 5 to 150 seconds.

Tea Fast Brew

Tea Fast Brew *(Factory set to OFF).*
Press ⦿ to Select, press < or > to choose ON or OFF. Selecting ON will start hot water spraying in the brewcone first and then 1 minute later the dilution water will start to flow.

Tea Half Batch

Tea Half Batch *(Factory set to OFF).*
Press ⦿ to Select. Press < or > buttons, to toggle between OFF and ON. Press ⦿ to set.

Drip-Out

Drip-Out *(Factory set to OFF)*
Press ⦿ to Select. Press < or > to adjust time. Settings are OFF, up to 15 minutes, at one minute increments.

Temperature

Temperature *(Factory set to 204ºF)*
Press ⦿ to Select. Press < or > to increase or decrease setting. Temperature range, from 170ºF to 208ºF in 2-degree increments.

Energy Save Mode

Energy Save Mode *(Factory set to OFF)*
Press ⦿ to Select, < or > ON, OFF or ON 140ºF , ⦿ to set. When in ON, unit will automatically shut off 4 hours from last brew. When feature is OFF, unit does not have the energy saving mode.
In the ON 140ºF position, temperature goes down to 140ºF. if unit has not brewed in 4 hours. This feature will save energy by maintaining a lower temperature in the tank during periods of non-operation.

Brew Count Odom

Brew Count Odom.
Press ⦿ to Select, Shows total gallons and total brew cycles on the unit. Press ex or Reset Brew Count Total.

Brew Count Total

Brew Count Total
Press ⦿ to Select, Shows total gallons and total brew cycles on the unit. Not resettable.

Cold Brew Lock

Cold Brew Lock *(Factory set to 5º F)*
Press ⦿ to select, < or > to select desired setting (CBL 5, 15 or OFF),⦿ to set.

The Cold Brew Lock feature allows the brewer to brew at three different temperature levels from the actual set point. The first setting is within 5 degrees of set point, next is within 15 degrees of set point, OFF is within 30 degrees of set point for the Ready to Brew message, however it will brew at any temperature.

Master Reset

Master Reset
Press ⦿ to display Are You Sure? Then < for Yes, > for No. When Master Reset is used, the all of the menu selections in the UCM return to factory defaults.

Service Call

Service Call *(Phone number Factory set to [800] 000-0000x)*
Press ⦿ to display number and change number or < to move place and EX to exit when complete. This number will be displayed during a Heating system SENSOR ERROR or during a WATER ERROR.

Access Code

Access Code *(Factory set to 1-2-3-4)*
Press ⦿ to display number and change number, (the number can be changed 1 to 4) or < to move place and ex to exit when complete.

Banner Name

Banner Name *(Factory set to CURTIS)*
Press ⦿ to display letters and change letters or < to move place and EX to exit when complete
This feature allows up to 14 letters to be programmed for company name or regional name. Programming all blanks disables Banner Name. If programmed, Banner Name is displayed every 5 sec. on and off.

Continued on Page 4

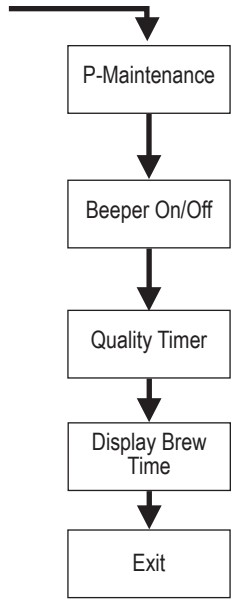

P-Maintenance *(Factory set to OFF)*
Press ⦿ to Select, Set gallons brewed to indicate P-Maintenance. Press < or > to adjust from Off to 3000 gallons. Press ⦿ to exit.

Beeper On/Off *(Factory set to ON)*
Press ⦿ to display ON or OFF. Pressing either < or > toggles between on and off. ⦿ to set. When ON, this feature allows you to hear a short beep each time a button is pressed.

Quality Timer *(Factory set to OFF)*
Press ⦿ to Select. By pressing < or > buttons, you can increase and decrease time. Setting range is from 0 to 10 hours in 1 hour increments. Press ⦿ to set. Expired time indicated by audio alarm and flashing "Quality Timer".

Display Brew Time *(Factory set to ON)*
Press ⦿ to Select. Pressing < or > toggles between ON and OFF.

Exit
Press ⦿ to select, exits program mode and returns unit to operation. Pressing > returns you to Tea Recipes.

PARTS LIST

ITEM	PART Nº	DESCRIPTION
1	WC-3301	BASKET, WIRE 7.00 DIA. USE WITH WC-3311 (OPTNL)
2	WC-3647	STRAINER BT-10 BREWCONE (EXCEPT PARADISE)
2A	WC-8532	STRAINER, TROPICAL BREWCONE
3	WC-3320	BREW CONE W/HANDLE 8.8" D W/STRNR (OPTIONAL)
4	WC-3201	HANDLE, BREW CONE BLACK FOR WC-3320
5	WC-37256	KIT, BREW CONE GOURMET PLASTIC ICED TEA
5A	WC-3358	BREWCONE W/WC-3320, WC-3301 & WC-3647 (OPTNL)
5B	WC-33001	BREWCONE ASSY, PARADISE TEA (OPTIONAL)
5C	WC-37239	KIT, BREW CONE BLK PLASTIC PARADISE TEA ONLY
6	WC-58117	COVER, TOP BREWER
7	WC-2977-101	FITTING, SPRAYHEAD ULTEM
8	WC-37189*	UCM KIT, LABEL & OVERLAY 120V TCTS/T
8A	WC-37338	KIT, UCM & OVERLAY W/HALF BATCH BREW TCTS
9	WC-39398*	LABEL, UCM PANEL TCT/PTT GT3 W/O FAUCET CURTIS
9A	WC-39628	LABEL, UCM PANEL W/HALF BATCH W/O FAUCET
10	WC-29025*	SPRAYHEAD, PURPLE ADVANCE FLOW
10A	WC-2942	SPRAYHEAD, GRAY (OLDER UNITS)
11	WC-2965	SPOUT, BYPASS ASSEMBLY
12	WC-8556*	HEAT SINK ASSY DV
13	WC-2401	ELBOW, 3/8 NPT X 1/4 FLRE PLTD
14	WC-58017	COVER, CENTER WRAP TCT-35S TCTDP-35S
14A	WC-58021	COVER, FRONT CENTER WRAP TCTT/TCTD-35S
14B	WC-58101	COVER, CENTER WRAP SS PTT3
15	WC- 102*	SWITCH, TOGGLE SPST 25A 125/250VAC RESISTIVE
16	WC-3518	LEG, GLIDE 3/8"-16 STUD SCREW

ITEM	PART Nº	DESCRIPTION
16A	WC-3503	LEG, 8-32 STD SCREW BUMPER
17	WC-8531	RAIL, BASE TCTD
18	WC-5853-102	COVER, TOP HEATING TANK GEN USE
18A	WC-5851	COVER, TANK W NOTCHES (OLDER UNITS)
19	WC-43062	GASKET, TANK LID
20	WC-6277	TANK ASSY, COMPLETE TEA BREWER
21	WC-5231*	COMPOUND SILICONE 5 OZ
22	WC-37278	KIT, LIQUID LEVEL PROBE GT
22A	WC-5502-01*	PROBE ASSY, W/HEX FTNG, O'RNG, NUT (OLDER UNIT)
23	WC- 904-04*	ELEMENT, HEATING 1.6KW 120V W/JAM NUTS
24	WC-4394	SHOCK GUARD, HEATING ELEMENT
25	WC-1438-101*	SENSOR, TEMPERATURE TANK
26	WC- 523*	THERMOSTAT, MANUAL RESET 120/220V 25A 220ºF MAX
27	WC-5310*	TUBING, 5/16" ID X 1/8" W SILICONE
28	WC-5683	LID ASSY, TCO
29	WC-38471	LABEL, FRONT ICED TEA GENERIC
30	WC-3724*	KIT, EZ-VIEW REPLACEMENT (OLDER UNITS)
31	WC-1803	FAUCET, SPB
32	WC-1805*	SEAT CUP, FAUCET S'
33	WC-3707*	KIT, REPAIR SPB FAUCET
34	WC-37260*	KIT, FAUCET W/ADAPTER COMPLETE
35	WC-2707	TEE, FLARE ¼ x ¼ x ⅜ BRASS
36	WC-53038	TUBE ASSY, FLEXIBLE 1/4 FLARE 11-1/8"
37	WC- 826L*	VALVE, INLET 1 GPM 120V 10W
38	WC- 801*	VALVE, INLET BRASS .50 GPM 120V 10W RU/WB

** Recommended parts to stock*

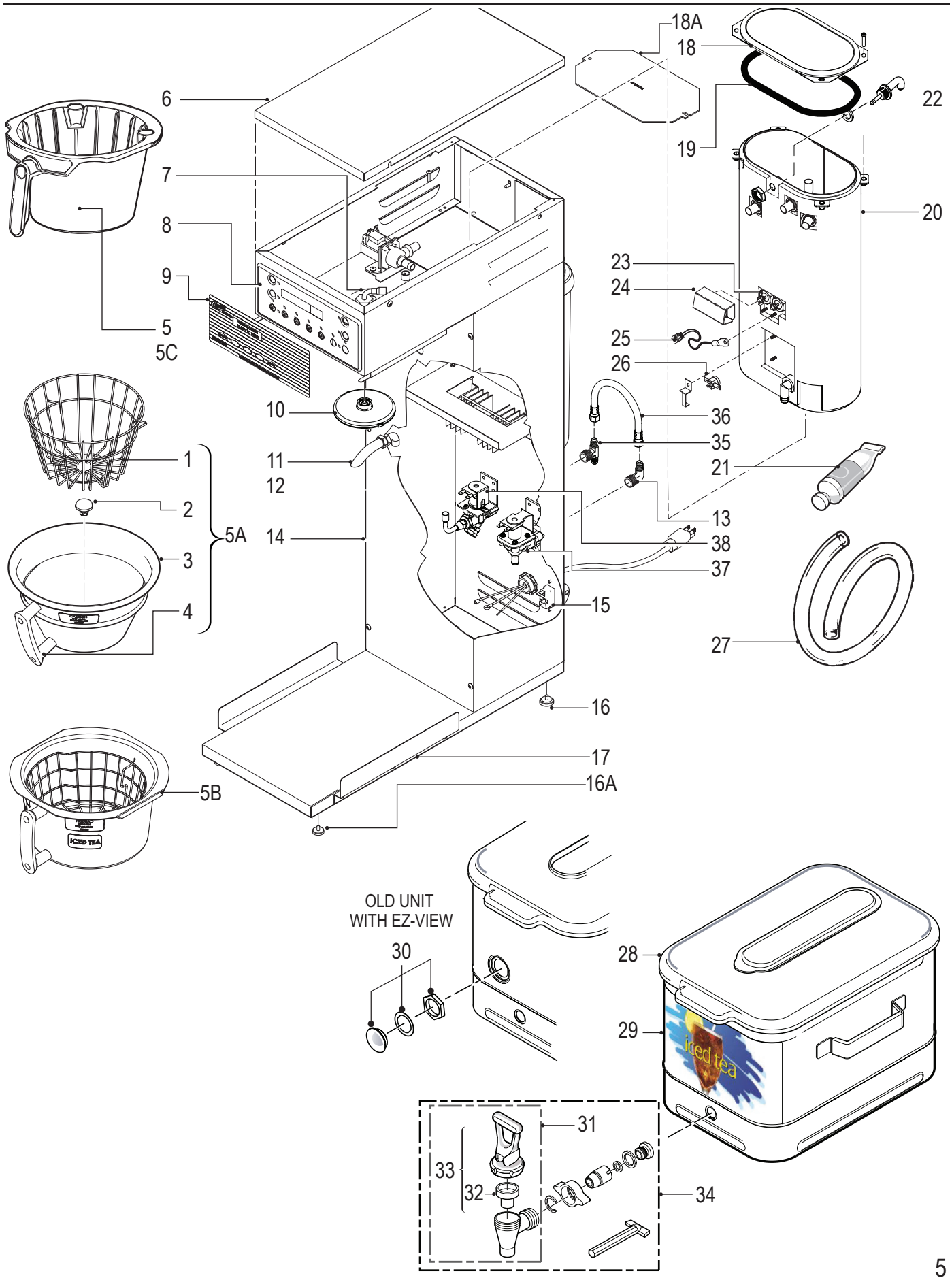
18A
18
22
6
19
7
20
8
23
9
24
5
25
5C
26
10
36
35
1
11
21
12
2
13
5A
14
38
3
37
4
15
27
16
17
5B
16A
OLD UNIT
WITH EZ-VIEW
30
28
29
iced tea
31
33
32
34

Illustrated Parts List
TCN

ITEM	PART Nº	DESCRIPTION
1	WC-61436	LID, BLACK PLASTIC TCN
2	WC-38471	LABEL, FRONT TCN GENERIC
3	WC-1803	FAUCET, SPB
4	WC-37260	KIT, FAUCET W/ADAPTER CMPLT
5	WC-3707	KIT, REPAIR SPB FAUCET
6	WC-1805	SEAT CUP, FAUCET S'
7	WC-38163	LABEL, CURTIS SWP CLR/WHT
8	WC-5686	DRIP TRAY, OCTAGON STYLE
9	WC-3531	LEG, PLASTIC GLIDE TCN
10	WC-3289	HANDLE, GASKET

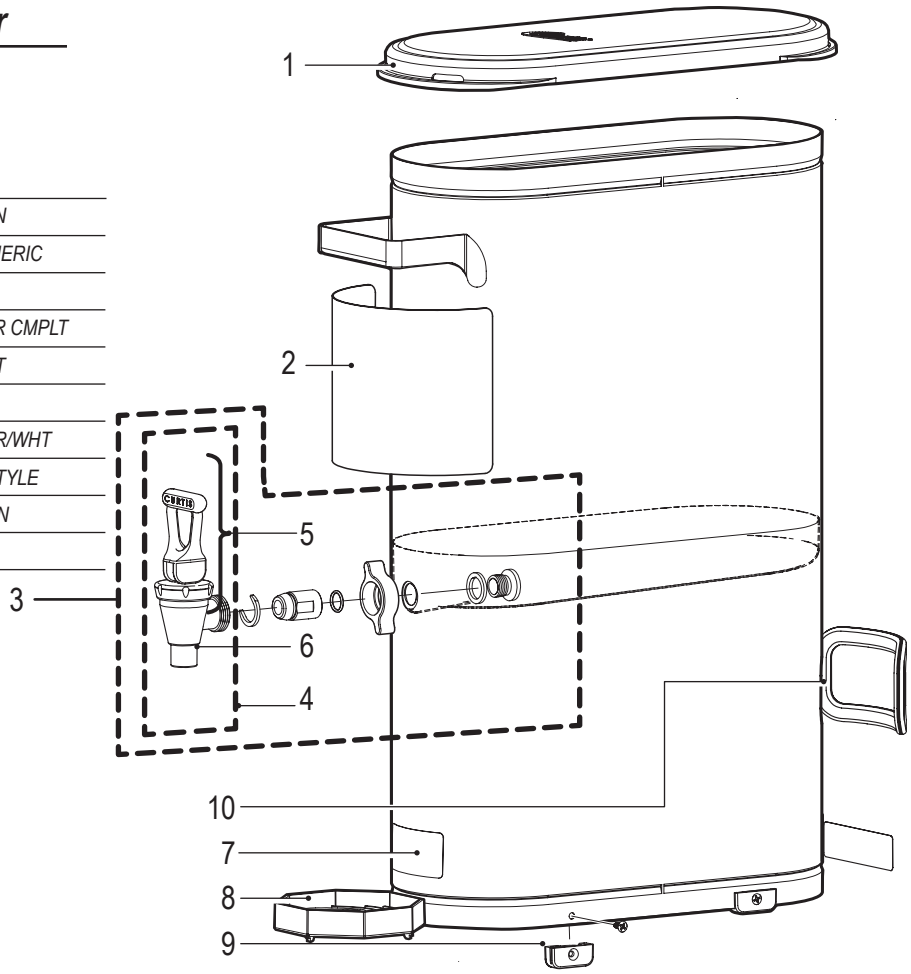

ICED TEA BREWER ELECTRICAL SCHEMATIC

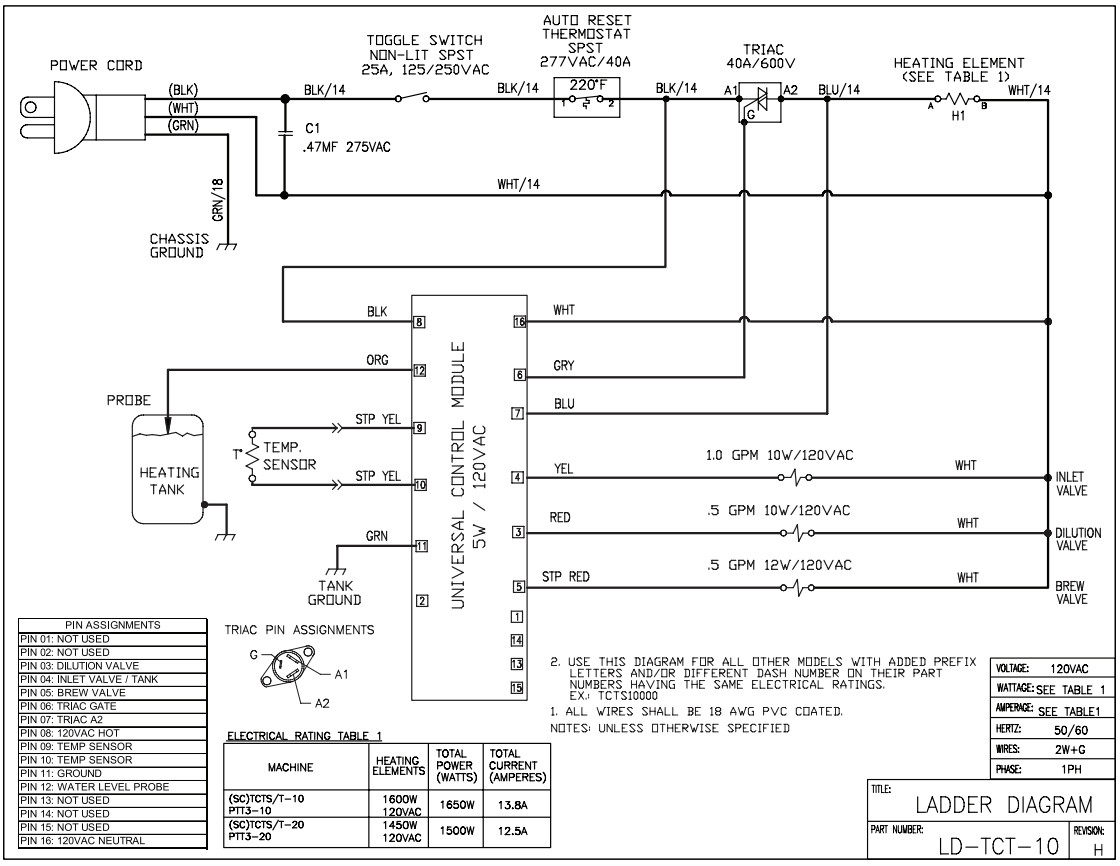

PIN ASSIGNMENTS
PIN 01: NOT USED
PIN 02: NOT USED
PIN 03: DILUTION VALVE
PIN 04: INLET VALVE / TANK
PIN 05: BREW VALVE
PIN 06: TRIAC GATE
PIN 07: TRIAC A2
PIN 08: 120VAC HOT
PIN 09: TEMP SENSOR
PIN 10: TEMP SENSOR
PIN 11: GROUND
PIN 12: WATER LEVEL PROBE
PIN 13: NOT USED
PIN 14: NOT USED
PIN 15: NOT USED
PIN 16: 120VAC NEUTRAL

ELECTRICAL RATING TABLE 1

MACHINE	HEATING ELEMENTS	TOTAL POWER (WATTS)	TOTAL CURRENT (AMPERES)
(SC)TCTS/T-10 PTT3-10	1600W 120VAC	1650W	13.8A
(SC)TCTS/T-20 PTT3-20	1450W 120VAC	1500W	12.5A

Models:
- CBS
- CBP

Important Safeguards/Conventions

Important Safeguards/Symbols

This appliance is designed for commercial use. Any servicing other than cleaning and preventive maintenance should be performed by an authorized Wilbur Curtis service technician.

- *Do NOT immerse the unit in water or any other liquid*
- *To reduce the risk of fire or electric shock, do NOT open service panels. No user serviceable parts inside.*
- *Keep hands and other items away from hot surfaces of unit during operation.*
- *Never clean with scouring powders, bleach or harsh chemicals.*

Symbols

WARNINGS – To help avoid personal injury

Important Notes/Cautions – from the factory

Sanitation Requirements

The Curtis G3 Brewer is Factory Pre-Set and Ready to Go… Right from the Box.

Following are the Factory Settings for the G3 Combo Brewer.

- *Brew Temperature = 204°F*
- *Brew Volume = Set to dispensing vessel requirements*

Generally there will never be a reason to change the G3/Gold Cup Series default settings. However, should you need to make slight adjustments to meet your brewing needs, programming instructions are provided later in this manual.

System Requirements:

- *Water Source 20 – 90 PSI. Minimum flow rate of ½ gpm (1 gpm preferred flow rate).*
- *Electrical: See electrical schematic on page 6.*

SETUP STEPS

The unit should be level (left to right and front to back), and located on a secure counter top. Connect a water line from the water filter to the brewer.

NOTE: A water filtration device must be used to maintain a trouble-free operation. (In areas with extremely hard water, we suggest that a sedimentary and taste & odor filter be installed.) This will prolong the life of your brewing system and enhance coffee quality.

NSF International requires the following water connection:
1. A quick disconnect or additional coiled tubing (at least 2x the depth of the unit) so that the machine can be moved for cleaning underneath.
2. In some areas an approved backflow prevention device may be required between the brewer and the water supply.
3. Water pipe connections and fixtures directly connected to a potable water supply shall be sized, installed and maintained in accordance with federal, state, and local codes.

1. *A 1/4" Flare has been supplied for water line connection. Use tubing sized sufficiently to provide ½ GPM (preferred flow rate is 1gpm).*
2. *Connect the unit to an appropriate electrical power circuit.*
3. *Turn on the toggle (STANDBY/ON) switch behind the unit. The heating tank will start to fill. When the water level in the tank rises to the correct volume, the heating element will energize automatically. With G3 tea brewers there is no danger of element burnout caused by an empty tank.*
4. *The heating tank will require 20 to 30 minutes to reach operating temperature (204°F) as indicated by the READY-TO-BREW LCD readout.*
5. *Important: Run one full brewcycle, to purge the water lines and valves of air. Five seconds of dilution water at the beginning of each brewcycle is normal pre-programmed operating behavior.*

CAUTION: Please use this setup procedure before attempting to use this brewer. Failure to follow the instructions can result in injury or the voiding of the warranty.

CAUTION: DO NOT connect this brewer to hot water. The inlet valve is not rated for hot water.

IMPORTANT: After setup, run a full TEA cycle first before running a COFFEE cycle. Place an empty tea container to catch both hot water from the brewcone and dilution water from spout on the front cover.

WARNING HOT LIQUID, Scalding may occur. Avoid splashing.

BREWING INSTRUCTIONS – COFFEE

1. *The brewer should be ON (Confirm at rear toggle switch, then press ON/OFF button on control panel). Ready-to-Brew should be displayed on the UCM screen.*
2. *Make sure that the folding airpot deck is is in the proper position to accomodate your airpot. Place a clean, empty airpot on the deck.*
3. *Place a new paper filter into the brewcone.*
4. *Pour ground coffee into brew-cone marked COFFEE*

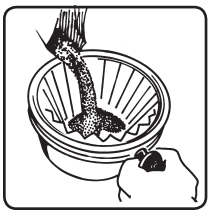

5. *Position filled brewcone into brew rails.*

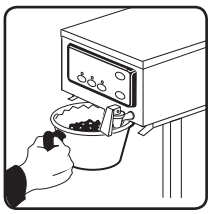

6. *Press COFFEE Brew button.*

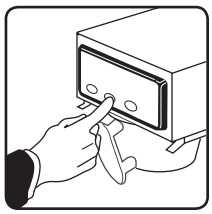

BREWING INSTRUCTIONS – TEA

1. *Brewer should be ON (Confirm at rear toggle switch, then press ON/OFF button) and Ready-to-Brew displayed.*
2. *Make sure deck is folded down and tea container is in place.*

IMPORTANT – Tea container must be pushed all the way to the back to ensure the safety switch is engaged and tea brewing can start (see exception on page 11).

3. *Place filter in brew basket. Pour leaf tea into basket marked ICED TEA or TROPICAL TEA.*

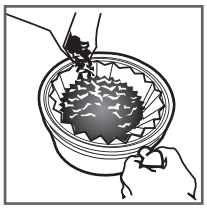

4. *Slide brew cone into brew rails. Place tea container under brew cone.*

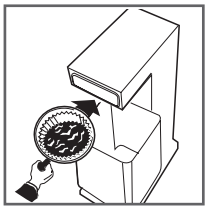

5. *Slide container in to activate switch behind folded coffee deck.*

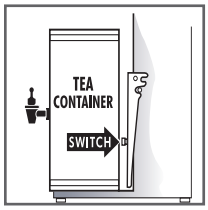

6. *Press the TEA BREW button.*

Quick Start CBP & CBS

Your Curtis G3/Gold Cup Series is Factory Pre-Set for Optimum Performance.
After connection to water and power; the rear toggle switch must be on. You will hear a beep sound, indicating power is available to the controller.

The control displays CURTIS *Press ON/OFF button and the screen will display* <Coffee/Tea Brewer> CURTIS *After three seconds,* CURTIS FILLING *displayed.*

Water will fill the tank (approximately 2-3 minutes depending on water flow rate). When the proper level is reached CURTIS HEATING *will appear on the screen. It takes approximately 20 minutes to reach set point temperature of 204°F.*

Control will display CURTIS READY TO BREW *when temperature reaches the set point (204°F). Unit is now ready to brew.*

To Go Into Programming

Turn off (dark display) by pressing ON/OFF button (yellow). Press and hold BREW button (4) (green) and then press and release ON/OFF button (yellow).

Continue holding BREW button. Display will read ENTERING PROGRAM MODE *, wait until* ENTER CODE _ _ _ _ *is displayed Enter the 4-digit access code, the digits 1-4 correspond to the buttons (see illustration below).*
The default code set at the factory is 1-2-3-4. Then PROGRAM MENUS < SELECT > *will be displayed.*

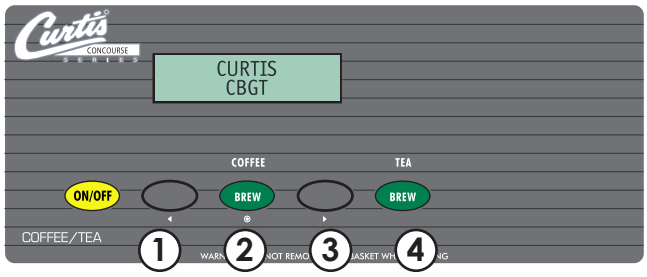

All programming selections are performed with the three center buttons. The symbols below the buttons are:

- ◁ ***Scroll LEFT*** (1)
- ⊙ ***SELECTION or ENTER to save new parameter*** (2)
- ▷ ***Scroll RIGHT*** (3)

IMPORTANT: **SPRAYHEADS**: Mentioned in this Programming guide are the words Gray and Purple. This refers to the color of the sprayhead. The current sprayhead is the purple AFS. The older version is the gray sprayhead. See the illustration at right.

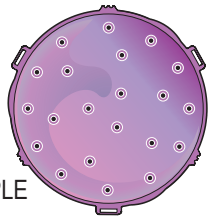
PURPLE

GRAY

PROGRAM MENUS

Program Menus → Tea Recipes

Selecting Brew by Volume or Brew by Time depends on whether you know your brew time before starting.
*From **Program Menus** press > display will now show the next feature.*

Tea Recipes *(Factory set to Standard – Purple)*
Press ⊙ to Select. Press < or > to toggle between Standard-Gray, Standard-Purple, Tropical-Gray, Tropical-Purple, 76/308-Gray and 76/308-Purple. Set and exit programming by pressing ⊙.

Continued on Page 9

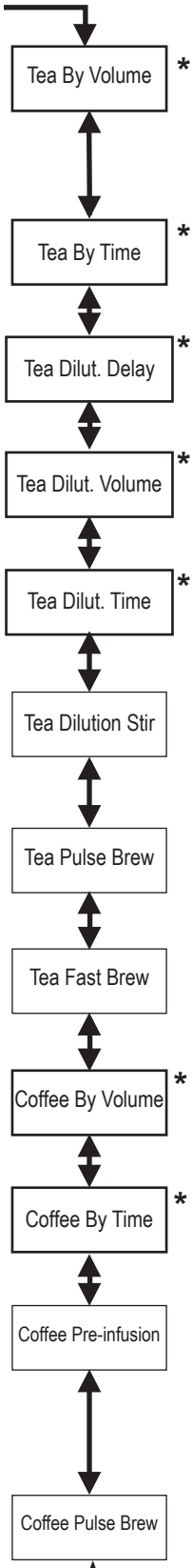

* ***Tea by Volume****: Scroll until Brew by Volume is displayed. Press ⦿ to Select. The display will read Select Brew Button! Once the desired brew button is selected (COFFEE or TEA), the display will read Press BREW to Start 0:00 Time. Press the FULL BREW button and hot water starts dispensing. When the desired volume is reached, press FULL BREW again to stop the flow. The brew volume has now been set (HALF BREW will always be half of the FULL BREW volume). When EXIT is displayed, Press ⦿ to select and exit the programming mode. Pressing > button will display the subsequent menu features.*

* ***Tea by Time****. (Factory set to 5:52) Press ⦿ to Select. Press < or > to increase or decrease time. Tea by Time has a range of 0:00 to 9:59 (Increments are minutes and seconds). For units with the half batch option, the Half Batch brew button is factory set at for half the brew time (2:56).*

* ***Dilution Delay****: (Factory set to 30 sec) Press ⦿ to Select. Press < or > to toggle between Standard-Gray (30 sec), Standard-Purple (30 sec), Tropical-Gray (9 min), Tropical-Purple (9 min), 76/308-Gray (4 min) and 76/308-Purple (4 min). Range is from 0 seconds, 1 minute to 10 minutes.*

* ***Dilution Volume****: Press ⦿ to Select, Display will now show Push START To Begin... Press the BREW button then water starts running, when desired volume is reached press BREW button again to stop the flow. Now the volume has been set. Pressing > button will display the subsequent menu features.*

* ***Dilution Time****: (Factory set to Standard Purple 4:05) Press ⦿ to Select. Press < or > to choose Standard-Gray (4min-5sec), Standard-Purple (4min-5sec), Tropical-Gray (4min-26sec), Tropical-Purple (4min-26sec), 76/308-Gray (4min-55sec) and 76/308-Purple (4min-55sec). Dilution range is 30 sec to 9 min, 59 sec. Half batch is factory set at 2:02.*

Tea Dilution Stir *(Factory set to Standard – Purple On).*
Press ⦿ to Select, press < or > for a choice of Standard-Gray: On, Standard-Purple: On, Tropical-Gray-Off, Tropical-Purple-Off, 76/308-Gray-Off and 76/308-Purple-Off. Dilution Stir applies only to the Dilution cycle, by pulsing the dilution time 45 seconds on, 5 seconds off.

Tea Pulse Brew *(Factory set to OFF).*
Press ⦿ to Select, press < or > to choose ON/OFF or D (manual programming). D will give you a pulsing spray of 1-20 pulses on and off at 5 second increments, depending on the total time set for brew (see Tea by Time).

Tea Fast Brew *(Factory set to OFF).*
Press ⦿ to Select, press < or > to choose ON or OFF. Selecting ON will start hot water spraying in the brewcone first and then 1 minute later the dilution water will start to flow.

* ***Coffee by Volume****: Press ⦿ to Select, Display will now show Push START To Begin... Press the FULL BREW button then hot water starts running, when desired volume is reached press FULL BREW button again to stop the flow. Now the volume has been set (HALF BREW will always be half of the FULL BREW volume).*

* ***Coffee by Time*** *(Factory set to 2min-25sec). Press ⦿ to Select to change the brew time. Display will now show the current time. By pressing < or > you can toggle back and forth from minutes to seconds to exit (ex). Change the time or set and exit by pressing ⦿.*

Pre-Infusion *(Factory set to OFF)*
Press ⦿ to Select. Current setting in seconds is displayed < to decrease or select > to increase (range from OFF to 10 through 60 seconds), ⦿ to set.
If Pre-infusion is selected (ON), Cold Brew Lock is set to within 5ºF of set point and Cold Brew Lock disappears from the list of program selections. When Pre-infusion is ON, Pulse Brew disappears from the list of program selections.

Pulse Brew *(Factory setting OFF)*
Press ⦿ to select, < or > to select OFF or one of five pulse patterns (A to E) .
Guidelines for Pulse Brew:
This feature allows tuning of the coffee flavor. This option should only be used with the standard Gray or Purple AFS sprayheads. The pot level should always be set first with this option OFF. Depending on your grind profile and water.

* *On units with the* ***half batch option****, the half batch brew button may be independently set.*

Continued on Page 10

Conditions, the three Pulse Brew options help "tune" or change the coffee flavor. Filter Pack type coffees typically extract better with the A and B pulse setting. Decaf coffees typically extract better with the B pulse setting. High-Yield coffees typically extract better with the C pulse setting. Of course, any of the A, B or C settings may be used to suit your taste profile. Settings D and E are manual pulse counts. If Pulse Brew is selected (ON), Cold Brew Lock is set to within 5ºF of set point and Cold Brew Lock disappears from the list of program selections.
When Pulse Brew is ON, Pre-infusion disappears from the list of program selections.

Coffee Drip-out Mode

Drip-out Mode *(Factory set to 3 minutes)*
Press ⊙ to Select. Press < or > to move to desired time. Settings are OFF, 1, 2, 3, 4 and 5 minutes. Press ⊙ to Select time.

Temperature

Temperature *(Factory set to 204°F)*
Press ⊙ to Select. Press < or > to move to desired temperature and then ⊙ to set. Temperature is programmable from 170ºF to 204ºF in 2-degree increments.

Energy Save Mode

Energy Save Mode *(Factory set to OFF)*
Press ⊙ to Select, < or > ON, OFF or ON 140ºF , ⊙ to set. When in ON, unit will automatically shut off 4 hours from last brew. When feature is OFF, unit does not have the energy saving mode.
In the ON 140ºF position, temperature goes down to 140ºF, if unit has not brewed in 4 hours. This feature will save energy by maintaining a lower temperature in the tank in periods of non-operation.

Brew Count Odom

Brew Count Odom
Press ⊙ to display total brew cycles. Press ex or Reset

Brew Count Total

Brew Count Total
Press ⊙ to Select, Shows total gallons and total brew cycles on the unit. Not resettable.

Cold Brew Lock

Cold Brew Lock *. . . (Factory set to 5ºF)*
Press ⊙ to select, < or > to select desired setting (CBL 5, 15 or OFF),⊙ to set.
The Cold Brew Lock feature allows the brewer to brew at three different temperature levels from the actual set point. The first setting is within 5 degrees of set point, next is within 15 degrees of set point, OFF is within 30 degrees of set point for the Ready to Brew message, however, it will brew at any temperature.

Master Reset

Master Reset
Press ⊙ to display Are You Sure?
Then < for Yes, > for No. Brewer factory defaults are then reset.

Service Call

Service Call *(Phone number Factory set to [800] 000-0000x)*
Press ⊙ to display number and change number or < to move place and EX to exit when complete. This number will be displayed during a Heating system SENSOR ERROR or during a WATER ERROR.

Access Code

Access Code *(Factory set to 1-2-3-4)*
Press ⊙ to display number and change number, (the number can be changed 1 to 4) or < to move place and ex to exit when complete.

Banner Name

Banner Name *(Factory set to CURTIS)*
Press ⊙ to display letters and change letters or < to move place and EX to exit when complete
This feature allows up to 14 letters to be programmed for company name or regional name. Programming all blanks disables Banner Name. If programmed, Banner Name is displayed every 5 sec. on and off.

P-Maintenance

P-Maintenance *(Factory set to OFF)*
Press ⊙ to Select, Set gallons brewed to indicate P-Maintenance. Press < or > to adjust from Off to 3000 gallons. Press ⊙ to exit.

Beeper On/Off

Beeper On/Off *(Factory set to ON)*
Press ⊙ to display ON or OFF. Pressing either < or > toggles between on and off. ⊙ to set. When ON, this feature allows you to hear a short beep each time a button is pressed.

Continued on Page 11

Half Batch

Half Batch *(Factory set to OFF)*
Activates Half Brew buttons. Press ⊙ to display ON or OFF. Pressing either < or > toggles between on and off. When this feature is ON, a half batch button can be used on the control panel.

Displ. Brew Time

Displ. Brew Time *(Factory set to ON)*
Press ⊙ to display ON or OFF. Pressing either < or > toggles between on and off.

Safety SW On/Off

Safety Sw On/Off *(Factory set to ON)*
Press ⊙ to display ON or OFF. Pressing either < or > toggles between on and off. ⊙ to set. When this feature is turned OFF, the tea brewing safety switch is by-passed. You may brew tea without having to depress the switch.

Exit

Exit
Press ⊙ to select, exits program mode and returns unit to operation. Pressing > returns you to Brew By Volume.

COMBO BREWER ELECTRICAL SCHEMATIC

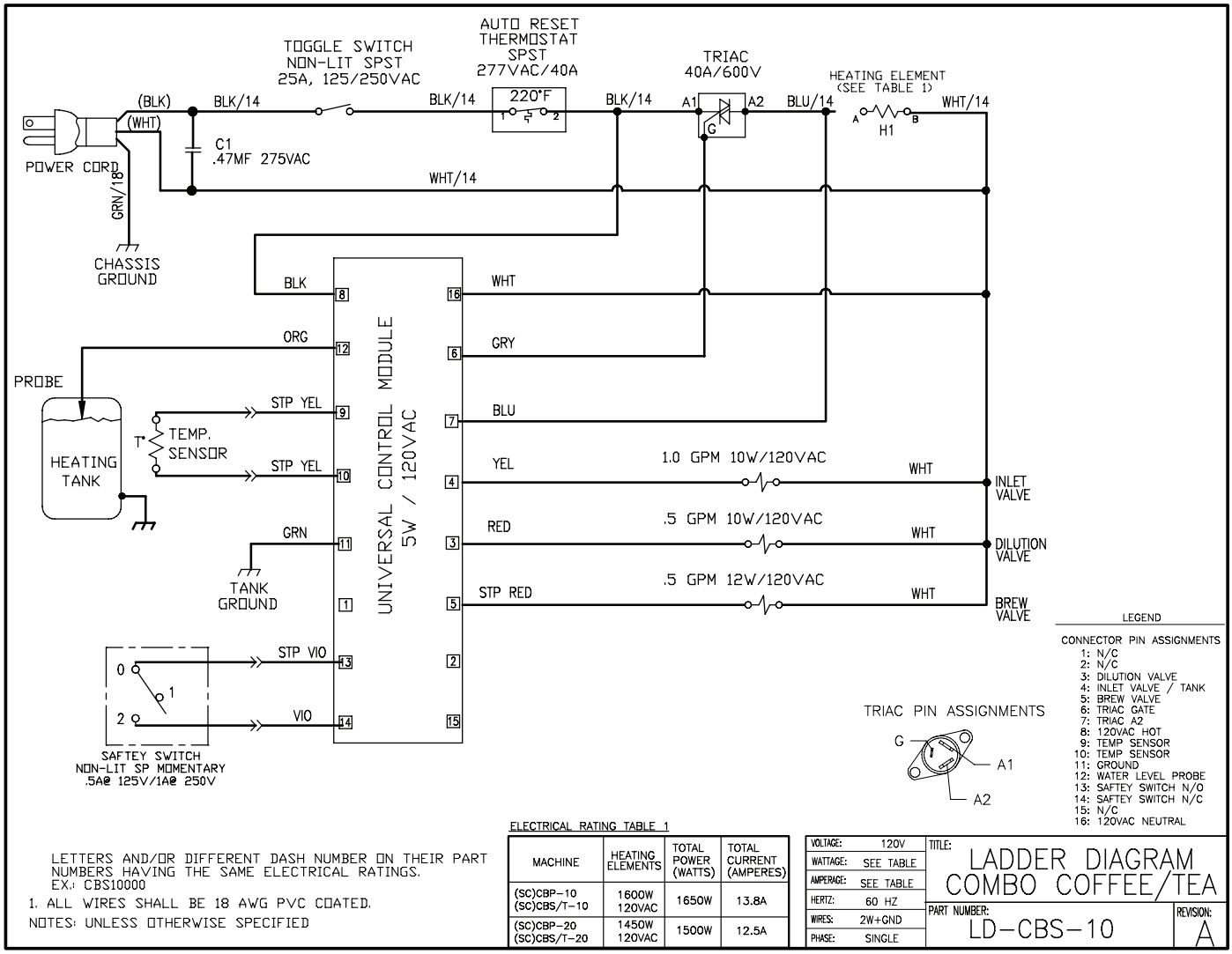

Illustrated Parts List
Curtis Combo Coffee & Tea Brewer

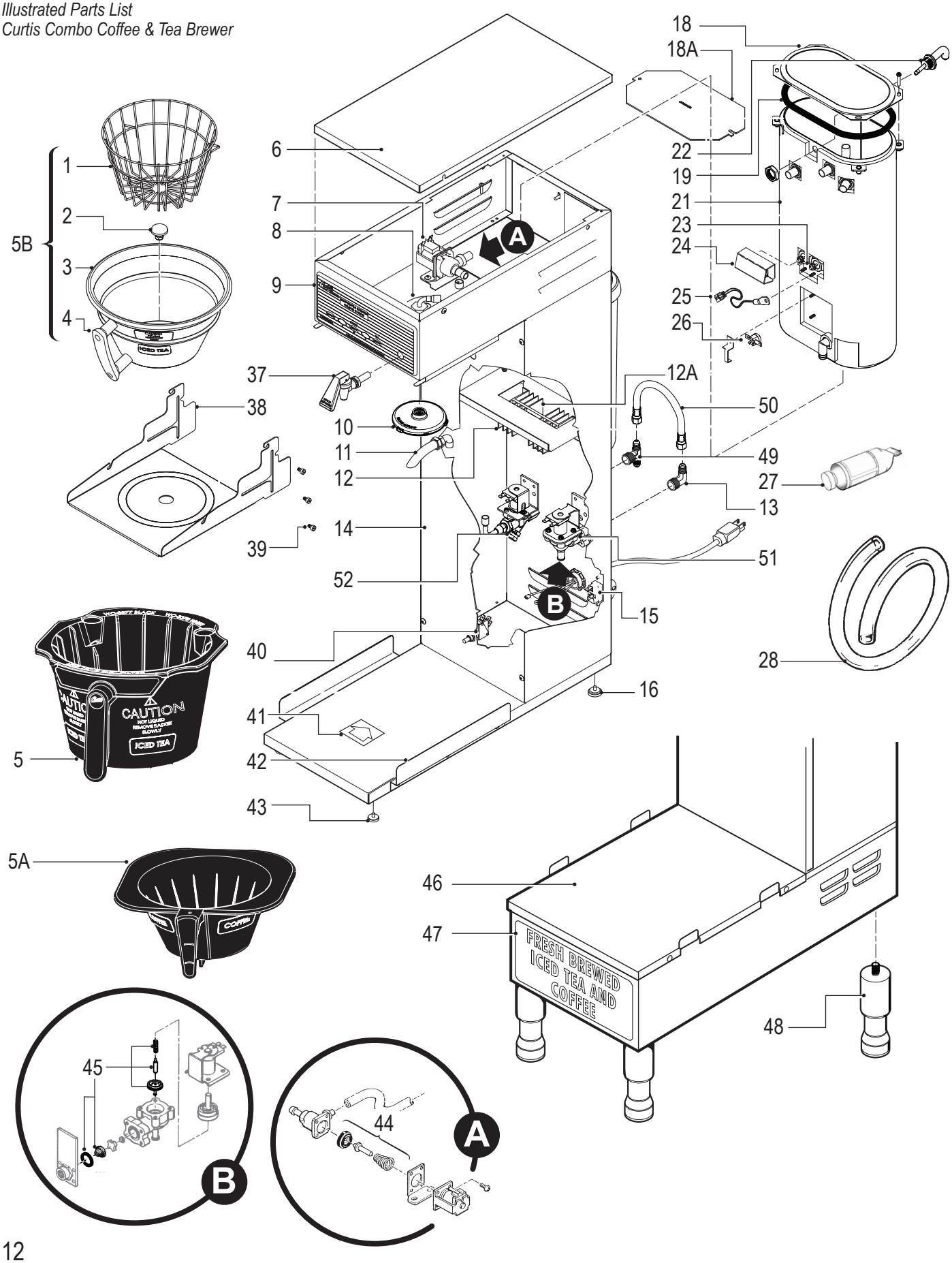

Illustrated Parts List
Curtis Combo Coffee & Tea Brewer

ITEM	PART Nº	DESCRIPTION
1	WC-3301	BASKET, WIRE (OPTIONAL)
2	WC-3647	STRAINER BT-10 BREWCONE (EXCEPT PARADISE)
3	WC-3320	BREW CONE W/HANDLE 8.8" D W/STRNR (OPTIONAL)
4	WC-3201	HANDLE, BREWCONE BLACK (FOR WC-3320)
5	WC-37256	KIT, BREW CONE GOURMET PLASTIC TEA UNITS
5A	WC-37242*	KIT, BREW CONE BLACK PLASTIC W/COFFEE LABELS
5B	WC-3358*	BREWCONE ASSY, ICED TEA (OPTIONAL)
6	WC-58117	COVER, TOP BREWER
7	WC- 889*	VALVE, DUMP LEFT 120V 12W
8	WC-2977-101	FITTING, SPRAYHEAD ULTEM
8A	WC-2977-01	FITTING ASSY, SPRAYHEAD W/O-RING (OLDER UNITS)
9	WC-37184*	KIT, LABEL & UCM CBS CURTIS
9A	WC-37301	KIT, LABEL & UCM CBS W/½ BREW (OPTIONAL)
10	WC-29025*	SPRAYHEAD, PURPLE ADVANCE FLOW
10A	WC-2942*	SPRAYHEAD, GRAY (OLDER UNITS)
11	WC-2965	SPOUT, BY-PASS ASSEMBLY
12	WC-8556*	HEAT SINK ASSY DV
12A	WC-6193-0	TRIAC, 40A 600V
13	WC-2401	ELBOW, 3/8 NPT X 1/4 FLRE PLTD
14	WC-58017-101	COVER, CENTER WRAP CBS SHORT
14A	WC-58021-101	COVER, FRONT CENTER WRAP CBS TALL
15	WC- 102*	SWITCH, TOGGLE SPST 25A 125/250VAC RESISTIVE
16	WC-3518*	LEG, GLIDE 3/8"-16 STUD SCREW
18	WC-5853-102	COVER, TOP HEATING TANK GEN USE
18A	WC-5851	COVER, TANK W NOTCHES
19	WC-43062*	GASKET, TANK LID
21	WC-6277	TANK ASSY, COMPLETE TEA BREWER
22	WC-37278*	KIT, LIQUID LEVEL PROBE GT
23	WC- 904-04*	ELEMENT, HEATING 1.6KW 120V W/JAM NUTS
24	WC-4394	SHOCK GUARD, HEATING ELEMENT
25	WC-1438-101*	SENSOR, TEMPERATURE TANK
26	WC- 523*	THERMOSTAT, MANUAL RESET 120/220V 25A 220ºF MAX
27	WC-5231*	COMPOUND SILICONE 5 OZ
28	WC-5310*	TUBING, 5/16" ID X 1/8" W SILICONE
29	TCO308A000	TEA CONTAINER OVAL 3 GAL 8 ½" (INCLD W/PTT BRWR)
29A	TCO417A000	TEA CONTAINER OVAL 4 GAL 17" (SOLD SEPARATELY)
29B	TCO419A000	TEA CONTAINER OVAL 4 GAL 19" (SOLD SEPARATELY)
29C	TCO421A000	TEA CONTAINER OVAL 4 GAL 21" (SOLD SEPARATELY)
30	WC-5683	LID ASSY, TCO
31	WC-38471	LABEL, FRONT TCO ICED TEA GENERIC
32	WC-3724*	KIT, E-Z VIEW REPLACEMENT
33	WC-1803	FAUCET, SPB
34	WC-3707*	KIT, REPAIR SPB FAUCET
35	WC-1805*	SEAT CUP, FAUCET S'
36	WC-37260*	KIT, FAUCET W/ADAPTER COMPLETE
37	WC-1809	FAUCET, HOT WATER
38	WC-61709*	SHELF, SS CBS
38A	WC-61708	SHELF, SS CBS (FOR UNITS BUILT BEFORE 2010)
39	WC-4538	SCREW, SHOULDER 8-32 X .25 x 3/16 LG THRD S.S.
39A	WC-4526	SCREW, 8-32 x .188 SHOULDER (OLDER UNITS)
40	WC- 169*	SWITCH, TEA CONTAINER TRIGGER 1A@125V
41	WC-38275	LABEL, PRESS TEA CONTAINER
42	WC-8531	RAIL, BASE TCTD
43	WC-3503*	LEG, 3/8"-16 STUD SCREW BUMPER
44	WC-3763*	KIT, VALVE REPAIR USE ON WC-889
45	WC-3765L*	KIT, INLET VALVE REPAIR USE ON WC-826L
46	WC-85008	SUPPORT, DECK EXTENDED SS (CBP ONLY)
47	WC-39550	LABEL, BOTTOM CPB
48	WC-3528	LEG, 4" ADJUSTABLE 3/8-16 THRD ITALIAN STYLE
49	WC-2707	TEE, FLARE ¼ x ¼ x ⅜ BRASS
50	WC-53038	TUBE ASSY, FLEXIBLE 1/4 FLARE 11-1/8"
51	WC- 826L*	VALVE, INLET 1 GPM 120V 10W
52	WC- 801*	VALVE, INLET BRASS .50 GPM 120V 10W RU/WB

* Recommended parts to stock

Illustrated Parts List
TCO Tea Server

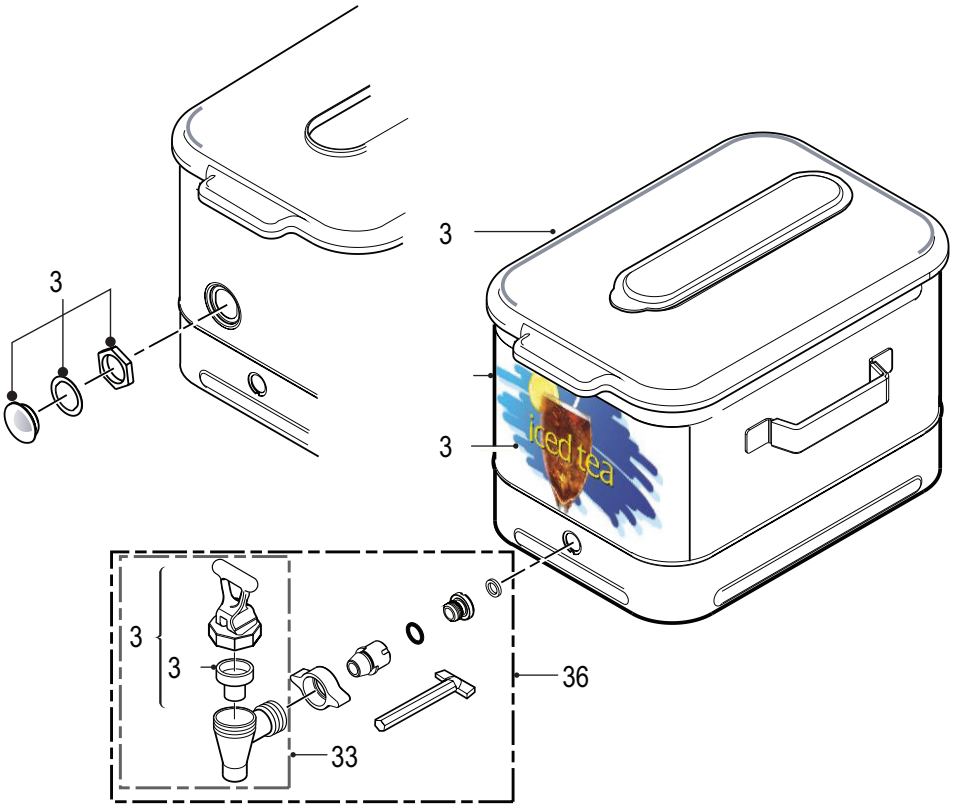

Illustrated Parts List
TCN

ITEM	PART Nº	DESCRIPTION
1	WC-61436	LID, BLACK PLASTIC TCN
2	WC-38471	LABEL, FRONT TCN GENERIC
3	WC-1803	FAUCET, SPB
4	WC-37260	KIT, FAUCET W/ADAPTER CMPLT
5	WC-3707	KIT, REPAIR SPB FAUCET
6	WC-1805	SEAT CUP, FAUCET S'
7	WC-38163	LABEL, CURTIS SWP CLR/WHT
8	WC-5686	DRIP TRAY, OCTAGON STYLE
9	WC-3531	LEG, PLASTIC GLIDE TCN
10	WC-3289	HANDLE, GASKET

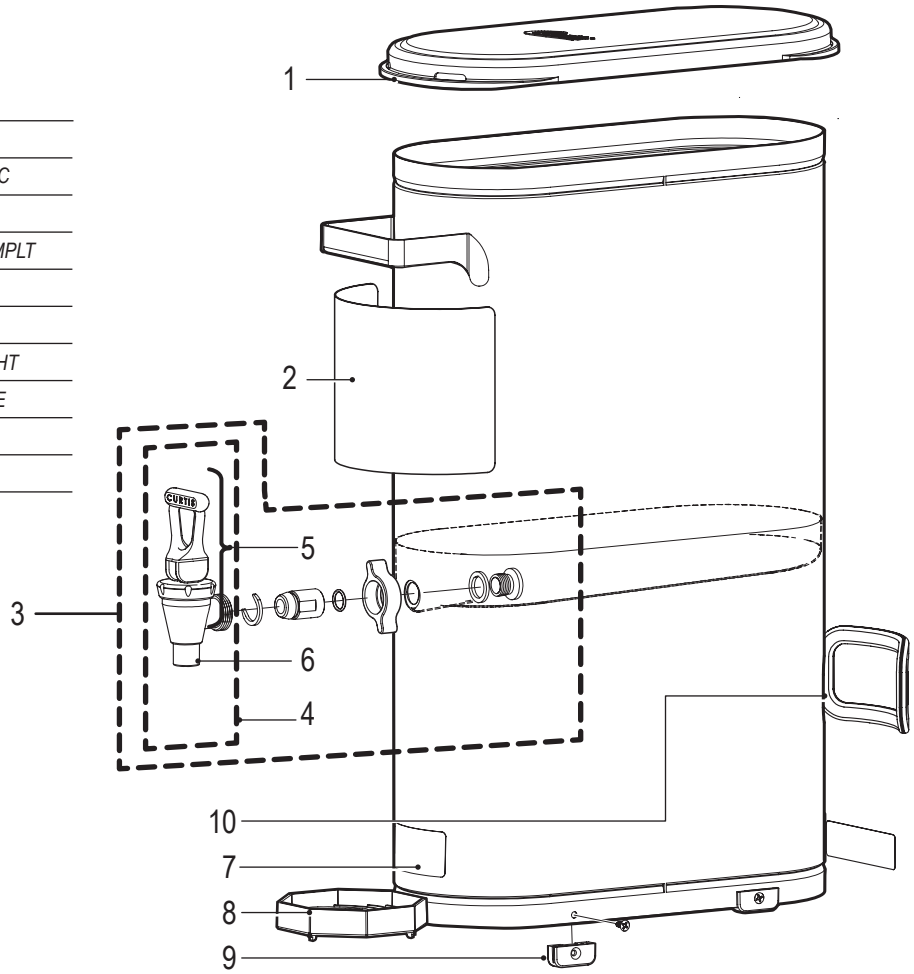

WARNING DO NOT refrigerate unused tea overnight for later consumption.

TEA TIPS

1. *Store tea bags in a dark, cool and dry place away from strong odors and moisture. Do not refrigerate.*
2. *Never hold finished brewed tea for more than eight hours at room temperature. Discard any unused tea after eight hours*
3. *Brew only enough tea that you reasonably expect to sell within a few hours.*
4. *To protect tea flavor and to avoid bacterial contamination and growth, clean and sanitize tea brewing, storage and dispensing equipment at least once a day.*

CLEANING

Regular cleaning of your airpots and tea containers will maintain the highest quality coffee and iced tea your equipment is capable of producing. A proper cleaning is essential in preserving the appearance of the brewer.

IMPORTANT: Clean out the screen, within the brewcone, to maintain the flow of brewed tea. Neglecting this screen will eventually cause the brewcone to overflow, spilling hot liquid over the unit.

CAUTION: DO NOT use undiluted bleach or chlorine.

CAUTION
Do not immerse airpots in water.
Do not place in dishwasher.
Do not use harsh powders or cleansers containing chlorine.
Do not use a wire brush or pot scour to clean inside liner.

1. *Turn off the tea brewer at the ON/OFF button on the front control panel.*
2. *Wipe exterior surfaces with a damp cloth, removing spills and debris.*
3. *Slide the brewcone out and clean it. Thoroughly soap the sprayhead area with a mild detergent solution.*
4. *Wash the brewcone and wire brew basket, if applicable. Use a soft bristled brush for hard to clean areas. Wash both parts with a detergent solution or put these parts through a dishwasher.*
5. *Wash the tea container and top cover. Use a detergent solution and a soft bristled brush to clean inside the container. Wipe the exterior surfaces with a sponge and detergent solution. Rinse thoroughly.*
6. *Clean the faucet assembly. Unscrew the handle assembly from the faucet and remove. Clean the faucet shank with a gage glass brush (circular bristle) by pushing the brush through the shank. Using the same brush clean the faucet body inlet and outlet. Clean the faucet cap and silicone seat cup.*
7. *After the cleaning, place the parts (sprayhead, brewcone and basket and faucet parts) into a sink to be sanitized.*

   To sanitize the disassembled parts:

   A. *Use a clean container to submerge all parts. Wear rubber gloves for protection.*

   B. *Immerse in commercial Bar Tabs/Sani-Tabs sanitizing solution The solution must be warm (75°F.) Let the parts soak for at least one minute.*
8. *Thoroughly rinse parts with hot water. Air dry, all parts that were sanitized.*
9. *After cleaning, sanitizing and drying, assemble any parts taken from the tea container.*
10. *Clean out airpots with a sponge brush and a mild detergent solution. To remove mineral deposits, fill liner with vinegar and allow to soak.*

Tank Temperature Check

Turn on brewer at the control panel ON/OFF button. Press and hold ③ button (see illustration, page 3) for 5 seconds. Water Temperature will be displayed (temperature in heating tank).

Error Message

With G3/Golden Cup Series brewers, there are three error messages that can appear on the screen to advise the user of a malfunction. If one of these error messages appear, the brewer will lock up and stop functioning until the error is corrected. An error message will occur under the following conditions:

(800) 000-000
Water Level Err

1. *Water level fill error or overflow. This error message occurs when the inlet valve solenoid has been on for more than 10 minutes. This error message also occurs when the valve is refilling the tank during a brew cycle for more than 1½ minutes.*

(800) 000-000
Sensor Err

2. *Water temperature control system error. An open probe or a break in the temperature control circuit is detected.*

Place Container
Against Switch

3. *This error message indicates that the safety switch (centered on the front panel) was not pressed when the user was attempting to brew tea. The tea brewing container must be pushed back against the switch to allow brewing to continue.*

The screen may display a phone number to call for service. After the malfunction is corrected, the error message must be cleared. To reset the control panel and return to normal operation, press ⦿ for 5 seconds.

Product Warranty Information

The Wilbur Curtis Company certifies that its products are free from defects in material and workmanship under normal use. The following limited warranties and conditions apply:

3 Years, Parts and Labor, from Original Date of Purchase on digital control boards.

2 Years, Parts, from Original Date of Purchase on all other electrical components, fittings and tubing.

1 Year, Labor, from Original Date of Purchase on all electrical components, fittings and tubing.

Additionally, the Wilbur Curtis Company warrants its Grinding Burrs for Forty (40) months from date of purchase or 40,000 pounds of coffee, whichever comes first. Stainless Steel components are warranted for two (2) years from date of purchase against leaking or pitting and replacement parts are warranted for ninety (90) days from date of purchase or for the remainder of the limited warranty period of the equipment in which the component is installed.
All in-warranty service calls must have prior authorization. For Authorization, call the Technical Support Department at 1-800-995-0417. Effective date of this policy is April 1, 2003.
Additional conditions may apply. Go to www.wilburcurtis.com to view the full product warranty information.

CONDITIONS & EXCEPTIONS
The warranty covers original equipment at time of purchase only. The Wilbur Curtis Company, Inc., assumes no responsibility for substitute replacement parts installed on Curtis equipment that have not been purchased from the
Wilbur Curtis Company, Inc. The Wilbur Curtis Company will not accept any responsibility if the following conditions are not met. The warranty does not cover and is void under the following circumstances:

1) Improper operation of equipment: The equipment must be used for its designed and intended purpose and function.
2) Improper installation of equipment: This equipment must be installed by a professional technician and must comply with all local electrical, mechanical and plumbing codes.
3) Improper voltage: Equipment must be installed at the voltage stated on the serial plate supplied with this equipment.
4) Improper water supply: This includes, but is not limited to, excessive or low water pressure, and inadequate or fluctuating water flow rate.
5) Adjustments and cleaning: The resetting of safety thermostats and circuit breakers, programming and temperature adjustments are the responsibility of the equipment owner. The owner is responsible for proper cleaning and regular maintenance of this equipment.
6) Damaged in transit: Equipment damaged in transit is the responsibility of the freight company and a claim should be made with the carrier.
7) Abuse or neglect (including failure to periodically clean or remove lime accumulations): Manufacturer is not responsible for variation in equipment operation due to excessive lime or local water conditions. The equipment must be maintained according to the manufacturer's recommendations.
8) Replacement of items subject to normal use and wear: This shall include, but is not limited to, light bulbs, shear disks, "0" rings, gaskets, silicone tube, canister assemblies, whipper chambers and plates, mixing bowls, agitation assemblies and whipper propellers.
9) Repairs and/or Replacements are subject to our decision that the workmanship or parts were faulty and the defects showed up under normal use. All labor shall be performed during regular working hours. Overtime charges are the responsibility of the owner. Charges incurred by delays, waiting time, or operating restrictions that hinder the service technician's ability to perform service is the responsibility of the owner of the equipment. This includes institutional and correctional facilities. The Wilbur Curtis Company will allow up to 100 miles, round trip, per in-warranty service call.

RETURN MERCHANDISE AUTHORIZATION: All claims under this warranty must be submitted to the Wilbur Curtis Company Technical Support Department prior to performing any repair work or return of this equipment to the factory. All returned equipment must be repackaged properly in the original carton. No units will be accepted if they are damaged in transit due to improper packaging. NO UNITS OR PARTS WILL BE ACCEPTED WITHOUT A RETURN MERCHANDISE AUTHORIZATION (RMA). RMA NUMBER MUST BE MARKED ON THE CARTON OR SHIPPING LABEL. All in-warranty service calls must be performed by an authorized service agent. Call the Wilbur Curtis Technical Support Department to find an agent near you.

WILBUR CURTIS CO., INC.
6913 Acco St., Montebello, CA 90640-5403 USA
Phone: 800/421-6150 ◆ *Fax: 323-837-2410*
◆ *Technical Support Phone: 800/995-0417 (M-F 5:30A - 4:00P PST)* ◆ *E-Mail: techsupport@wilburcurtis.com*
◆ *Web Site: www.wilburcurtis.com*

FOR THE LATEST SPECIFICATION INFORMATION GO TO WWW.WILBURCURTIS.COM

Printed in U.S.A. 3/11 F-3329-S Rev P

ECN 13004 . 3/4/11 @ 7.5